Outline

1. Cache coherence – the hardware view
2. Synchronization and memory consistency review
3. C11 Atomics
4. Avoiding locks

Important memory system properties

- **Coherence – concerns accesses to a single memory location**
  - Must obey program order if access from only one CPU
  - There is a total order on all updates
  - There is bounded latency before everyone sees a write
- **Consistency – concerns ordering across memory locations**
  - Even with coherence, different CPUs can see the same write happen at different times
  - Sequential consistency is what matches our intuition (As if instructions from all CPUs interleaved on one CPU)
  - Many architectures offer weaker consistency
  - Yet well-defined weaker consistency can still be sufficient to implement thread API contract from concurrency lecture

Multicore Caches

- **Performance requires caches**
  - Divided into chuncks of bytes called lines (e.g., 64 bytes)
  - Caches create an opportunity for cores to disagree about memory
- **Bus-based approaches**
  - "Snoopy" protocols, each CPU listens to memory bus
  - Use write-through and invalidate when you see a write bits
  - Bus-based schemes limit scalability
- **Modern CPUs use networks (e.g., hypertransport, QPI)**
  - CPUs pass each other messages about cache lines

MESI coherence protocol

- **Modified**
  - One cache has a valid copy
  - That copy is dirty (needs to be written back to memory)
  - Must invalidate all copies in other caches before entering this state
- **Exclusive**
  - Same as Modified except the cache copy is clean
- **Shared**
  - One or more caches and memory have a valid copy
- **Invalid**
  - Doesn't contain any data
- **Owned (for enhanced "MOESI" protocol)**
  - Memory may contain stale value of data (like Modified state)
  - But have to broadcast modifications (sort of like Shared state)
  - Can have both one owned and multiple shared copies of cache line

Core and Bus Actions

- **Core**
  - Read
  - Write
  - Evict (modified? must write back)
- **Bus**
  - Read: without intent to modify, data can come from memory or another cache
  - Read-exclusive: with intent to modify, must invalidate all other cache copies
  - Writeback: contents put on bus and memory is updated

cc-NUMA

- **Old machines used *dance hall* architectures**
  - Any CPU can "dance with" any memory equally
- **An alternative: Non-Uniform Memory Access (NUMA)**
  - Each CPU has fast access to some "close" memory
  - Slower to access memory that is farther away
  - Use a directory to keep track of who is caching what
- **Originally for esoteric machines with many CPUs**
  - But AMD and then intel integrated memory controller into CPU
  - Faster to access memory controlled by the local socket (or even local die in a multi-chip module)
- **cc-NUMA = cache-coherent NUMA**
  - Rarely see non-cache-coherent NUMA (BBN Butterfly 1, Cray T3D)

Real World Coherence Costs

- **See [David] for a great reference. Xeon results:**
  - 3 cycle L1, 11 cycle L2, 44 cycle LLC, 355 cycle local RAM
- **If another core in same socket holds line in modified state:**
  - load: 109 cycles (LLC + 65)
  - store: 115 cycles (LLC + 71)
  - atomic CAS: 120 cycles (LLC + 76)
- **If a core in a different socket holds line in modified state:**
  - NUMA load: 289 cycles
  - NUMA store: 320 cycles
  - NUMA atomic CAS: 324 cycles
- **But only a partial picture**
  - Could be faster because of out-of-order execution
  - Could be slower if interconnect contention or multiple hops

NUMA and spinlocks

- **Test-and-set spinlock has several advantages**
  - Simple to implement and understand
  - One memory location for arbitrarily many CPUs
- **But also has disadvantages**
  - Lots of traffic over memory bus (especially when > 1 spinner)
  - Not necessarily fair (same CPU acquires lock many times)
  - Even less fair on a NUMA machine
- **Idea 1: Avoid spinlocks altogether (today)**
- **Idea 2: Reduce bus traffic with better spinlocks (next lecture)**
  - Design lock that spins only on local memory
  - Also gives better fairness

Outline

1. Cache coherence – the hardware view
2. Synchronization and memory consistency review
3. C11 Atomics
4. Avoiding locks

Amdahl's law

$$T(n) = T(1)\left(B + \frac{1}{n}(1 - B)\right)$$

- **Expected speedup limited when only part of a task is sped up**
  - $T(n)$: the time it takes n CPU cores to complete the task
  - B: the fraction of the job that must be serial
- **Even with massive multiprocessors,** $\lim_{n\to\infty} = B \cdot T(1)$

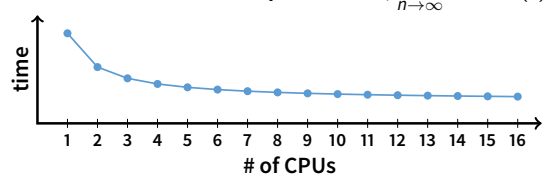

  - Places an ultimate limit on parallel speedup
- **Problem: synchronization increases serial section size**

Locking basics

```
mutex_t m;

lock(&m);
cnt = cnt + 1; /* critical section */
unlock(&m);
```

- **Only one thread can hold a mutex at a time**
  - Makes critical section atomic
- **Recall thread API contract**
  - All access to global data must be protected by a mutex
  - Global = two or more threads touch data and at least one writes
- **Means must map each piece of global data to one mutex**
  - Never touch the data unless you locked that mutex
- **But many ways to map data to mutexes**

Locking granularity

- **Consider two lookup implementations for global hash table:**

```
struct list *hash_tbl[1021];
```

coarse-grained locking

```
mutex_t m;
      ⋮
  mutex_lock(&m);
  struct list_elem *pos = list_begin (hash_tbl[hash(key)]);
  /* ... walk list and find entry ... */
  mutex_unlock(&m);
```

fine-grained locking

```
mutex_t bucket_lock[1021];
      ⋮
  int index = hash(key);
  mutex_lock(&bucket_lock[index]);
  struct list_elem *pos = list_begin (hash_tbl[index]);
  /* ... walk list and find entry ... */
  mutex_unlock(&bucket_lock[index]);
```

- **Which implementation is better?**

Locking granularity (continued)

- **Fine-grained locking admits more parallelism**
  - E.g., imagine network server looking up values in hash table
  - Parallel requests will usually map to different hash buckets
  - So fine-grained locking should allow better speedup
- **When might coarse-grained locking be better?**

Locking granularity (continued)

- **Fine-grained locking admits more parallelism**
  - E.g., imagine network server looking up values in hash table
  - Parallel requests will usually map to different hash buckets
  - So fine-grained locking should allow better speedup
- **When might coarse-grained locking be better?**
  - Suppose you have global data that applies to whole hash table

```
struct hash_table {
  size_t num_elements;     /* num items in hash table */
  size_t num_buckets;      /* size of buckets array */
  struct list *buckets;    /* array of buckets */
};
```

  - Read `num_buckets` each time you insert
  - Check `num_elements` each insert, possibly expand buckets & rehash
  - Single global mutex would protect these fields
- **Can you avoid serializing lookups to hash table?**

Readers-writers problem

- **Recall a `mutex` allows access in only one thread**
- **But a data race occurs only if**
  - Multiple threads access the same data, and
  - At least one of the accesses is a write
- **How to allow multiple readers *or* one single writer?**
  - Need lock that can be *shared* amongst concurrent readers
- **Can implement using other primitives (next slides)**
  - Keep integer `i` – # or readers or -1 if held by writer
  - Protect `i` with mutex
  - Sleep on condition variable when can't get lock

Implementing shared locks

```
struct sharedlk {
  int i;    /* # shared lockers, or -1 if exclusively locked */
  mutex_t m;
  cond_t c;
};

void AcquireExclusive (sharedlk *sl) {
  lock (&sl->m);
  while (sl->i) { wait (&sl->m, &sl->c); }
  sl->i = -1;
  unlock (&sl->m);
}

void AcquireShared (sharedlk *sl) {
  lock (&sl->m);
  while (&sl->i < 0) { wait (&sl->m, &sl->c); }
  sl->i++;
  unlock (&sl->m);
}
```


Implementing shared locks (continued)

```
void ReleaseShared (sharedlk *sl) {
  lock (&sl->m);
  if (!--sl->i)
    signal (&sl->c);
  unlock (&sl->m);
}

void ReleaseExclusive (sharedlk *sl) {
  lock (&sl->m);
  sl->i = 0;
  broadcast (&sl->c);
  unlock (&sl->m);
}
```

- **Any issues with this implementation?**

Implementing shared locks (continued)

```
void ReleaseShared (sharedlk *sl) {
  lock (&sl->m);
  if (!--sl->i)
    signal (&sl->c);
  unlock (&sl->m);
}

void ReleaseExclusive (sharedlk *sl) {
  lock (&sl->m);
  sl->i = 0;
  broadcast (&sl->c);
  unlock (&sl->m);
}
```

- **Any issues with this implementation?**
  - Prone to starvation of writer (no bounded waiting)
  - How might you fix?

Review: Test-and-set spinlock

```
struct var {
  int lock;
  int val;
};

void atomic_inc (var *v) {
  while (test_and_set (&v->lock))
    ;
  v->val++;
  v->lock = 0;
}

void atomic_dec (var *v) {
  while (test_and_set (&v->lock))
    ;
  v->val--;
  v->lock = 0;
}
```

- **Is this code correct without sequential consistency?**

Memory reordering danger

- **Suppose no sequential consistency (& don't compensate)**
- **Hardware could violate program order**

Program order on CPU #1

```
v->lock = 1;
register = v->val;
v->val = register + 1;
v->lock = 0;
```

View on CPU #2

```
v->lock = 1;


v->lock = 0;
/* danger */;
v->val = register + 1;
```

- **If `atomic_inc` called at `/* danger */`, bad `val` ensues!**

Ordering requirements

```
void atomic_inc (var *v) {
  while (test_and_set (&v->lock))
    ;
  v->val++;
  /* danger */
  v->lock = 0;
}
```

- **Must ensure all CPUs see the following:**
  1. `v->lock = 1` ran *before* `v->val` was read and written
  2. `v->lock = 0` ran *after* `v->val` was written
- **How does #1 get assured on x86?**
  - Recall `test_and_set` uses `xchgl %eax,(%edx)`
- **How to ensure #2 on x86?**

Ordering requirements

```
void atomic_inc (var *v) {
  while (test_and_set (&v->lock))
    ;
  v->val++;
  /* danger */
  v->lock = 0;
}
```

- **Must ensure all CPUs see the following:**
  1. `v->lock = 1` ran *before* `v->val` was read and written
  2. `v->lock = 0` ran *after* `v->val` was written
- **How does #1 get assured on x86?**
  - Recall `test_and_set` uses `xchgl %eax,(%edx)`
  - `xchgl` instruction always "locked," ensuring barrier
- **How to ensure #2 on x86?**

Ordering requirements

```
void atomic_inc (var *v) {
  while (test_and_set (&v->lock))
    ;
  v->val++;
  /* danger */
  v->lock = 0;
}
```

- **Must ensure all CPUs see the following:**
  1. `v->lock = 1` ran *before* `v->val` was read and written
  2. `v->lock = 0` ran *after* `v->val` was written
- **How does #1 get assured on x86?**
  - Recall `test_and_set` uses `xchgl %eax,(%edx)`
  - `xchgl` instruction always "locked," ensuring barrier
- **How to ensure #2 on x86?**
  - Might need fence instruction after, e.g., non-temporal stores
  - Definitely need compiler barrier

Gcc extended `asm` syntax [FSF]

`asm volatile (`*template-string* `:` *outputs* `:` *inputs* `:` *clobbers*`);`

- **Puts *template-string* in assembly language compiler output**
  - Expands `%0`, `%1`, … (a bit like printf conversion specifiers)
  - Use "`%%`" for a literal `%` (e.g., "`%%cr3`" to specify `%cr3` register)
- ***inputs*/*outputs* specify parameters as `"`*constraint*`"` (*value*)**

```
int outvar, invar = 3;
asm ("movl %1, %0" : "=r" (outvar) : "r" (invar));
/* now outvar == 3 */
```

- ***clobbers* lists other state that get used/overwritten**
  - Special value `"memory"` prevents reordering with loads & stores
  - Serves as *compiler barrier*, as important as hardware barrier
- **`volatile` indicates side effects other than result**
  - Otherwise, gcc might optimize away if you don't use result

Correct spinlock on alpha

- **Recall implementation of `test_and_set` on alpha (with much weaker memory consistency than x86):**

```
_test_and_set:
    ldq_l   v0, 0(a0)          # v0 = *lockp (LOCKED)
    bne     v0, 1f             # if (v0) return
    addq    zero, 1, v0        # v0 = 1
    stq_c   v0, 0(a0)          # *lockp = v0 (CONDITIONAL)
    beq     v0, _test_and_set  # if (failed) try again
    mb
    addq    zero, zero, v0     # return 0
1:  ret     zero, (ra), 1
```

- ***Memory barrier* instruction `mb` (like `mfence`)**
  - All processors will see that everything before `mb` in program order happened before everything after `mb` in program order
- **Need barrier before releasing spinlock as well:**

```
asm volatile ("mb" ::: "memory");
v->lock = 0;
```


Memory barriers/fences

- **Fortunately, consistency need not overly complicate code**
  - If you do locking right, only need a few fences within locking code
  - Code will be easily portable to new CPUs
- **Most programmers should stick to mutexes**
- **But advanced techniques may require lower-level code**
  - Later this lecture will see some wait-free algorithms
  - Also important for optimizing special-case locks (E.g., linux kernel `rw_semaphore`, ...)
- **Algorithms often explained assuming sequential consistency**
  - Must know how to use memory fences to implement correctly
  - E.g., see [Howells] for how Linux deals with memory consistency
  - Also, another plug for Why Memory Barriers
- **Next: How C11 allows portable low-level code**

Outline

1. Cache coherence – the hardware view
2. Synchronization and memory consistency review
3. C11 Atomics
4. Avoiding locks

Atomics and portability

- **Lots of variation in atomic instructions, consistency models, compiler behavior**
  - Changing the compiler or optimization level can invalidate code
- **Different CPUs today: Your laptop is x86, but cell phone ARM**
  - x86: Total Store Order Consistency Model, CISC
  - arm: Relaxed Consistency Model, RISC
- **Could make it impossible to write portable kernels and applications**
- **Fortunately, the C11 standard has builtin support for atomics**
  - Enable in GCC with the `-std=gnu11` flag (now the default)
- **Also available in C++11, but won't discuss today**

Background: C memory model [C11]

- **Within a thread, many evaluations are *sequenced***
  - E.g., in "`f1(); f2();`", evaluation of `f1` is sequenced before `f2`
- **Across threads, some operations *synchronize with* others**
  - E.g., releasing mutex m synchronizes with a subsequent acquire m
- **Evaluation A *happens before* B, which we'll write $A \rightarrow B$, when:**
  - A is sequenced before B (in the same thread),
  - A synchronizes with B,
  - A is dependency-ordered before B (ignore for now—means A has release semantics and B consume semantics for same value), or
  - There is another operation X such that $A \rightarrow X \rightarrow B$.[1]

[1] Except chain of "$\rightarrow$" cannot end: ..., dependency-ordered, sequenced before

C11 Atomics: Big picture

- **C11 says behavior of a *data race* is undefined**
  - A write conflicts with a read or write of same memory location
  - Two conflicting operations *race* if not ordered by happens before
  - Undefined can be anything (e.g., delete all your files, ...)
- **Spinlocks (and hence mutexes that internally use spinlocks) synchronize across threads**
  - Synchronization adds happens before arrows, avoiding data races
- **Yet hardware supports other means of synchronization**
- **C11 atomics provide direct access to synchronized lower-level operations**
  - E.g., can get compiler to issue `lock` prefix in some cases

C11 Atomics: Basics

- **Include new** `<stdatomic.h>` **header**
- **New** `_Atomic` **type qualifier: e.g.,** `_Atomic int foo;`
  - Convenient aliases: `atomic_bool`, `atomic_int`, `atomic_ulong`, ...
  - Must initialize specially:

```
#include <stdatomic.h>
Atomic_ int global_int = ATOMIC_VAR_INIT(140);
        ⋮
    Atomic_(int) *dyn = malloc(sizeof(*dyn));
    atomic_init(dyn, 140);
```

- **Compiler emits read-modify-write instructions for atomics**
  - E.g., +=, -=, |=, &=, ^=, ++, -- do what you would hope
  - Act atomically and synchronize with one another
- **Also functions including** `atomic_fetch_add`, `atomic_compare_exchange_strong`, **...**

Locking and atomic flags

- **Implementations might use spinlocks internally for most atomics**
  - Could interact badly with interrupt/signal handlers
  - Can check if `ATOMIC_INT_LOCK_FREE`, etc., macros defined
  - Fortunately modern CPUs don't require this
- `atomic_flag` **is a special type guaranteed lock-free**
  - Boolean value without support for loads and stores
  - Initialize with: `atomic_flag mylock = ATOMIC_FLAG_INIT;`
  - Only two kinds of operation possible:
    - `_Bool atomic_flag_test_and_set(volatile atomic_flag *obj);`
    - `void atomic_flag_clear(volatile atomic_flag *obj);`
  - Above functions guarantee sequential consistency (atomic operation serves as memory fence, too)

Exposing weaker consistency

```
enum memory_order { /*...*/ };

_Bool atomic_flag_test_and_set_explicit(
    volatile atomic_flag *obj, memory_order order);
void atomic_flag_clear_explicit(
    volatile atomic_flag *obj, memory_order order);

C atomic_load_explicit(
    const volatile A *obj, memory_order order);
void atomic_store_explicit(
    volatile A *obj, C desired, memory_order order);

bool atomic_compare_exchange_weak_explicit(
    A *obj, C *expected, C desired,
    memory_order succ, memory_order fail);
```

- **Atomic functions have** `_explicit` **variants**
  - These guarantee coherence but *not* sequential consistency
  - May allow compiler to generate faster code

Memory ordering

- **Six possible** `memory_order` **values:**
  1. `memory_order_relaxed`: no memory ordering
  2. `memory_order_consume`: super tricky, see [Preshing] for discussion
  3. `memory_order_acquire`: for start of critical section
  4. `memory_order_release`: for end of critical section
  5. `memory_order_acq_rel`: combines previous two
  6. `memory_order_seq_cst`: full sequential consistency
- **Also have fence operation not tied to particular atomic:** `void atomic_thread_fence(memory_order order);`
- **Suppose thread 1 releases and thread 2 acquires**
  - Thread 1's preceding accesses can't move past **release** store
  - Thread 2's subsequent accesses can't move before **acquire** load
  - Warning: other threads might see a completely different order

Types of memory fence[2]

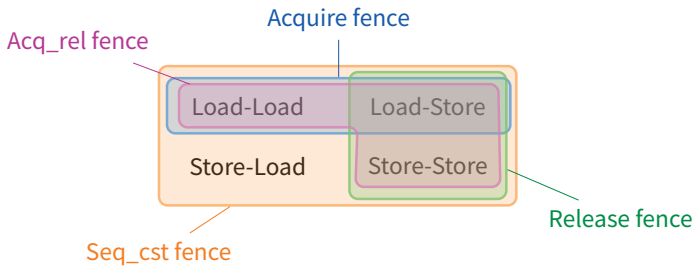

- *X*-*Y* **fence = operations of type** *X* **sequenced before the fence happen before operations of type** *Y* **sequenced after the fence**

[2] Credit to [Preshing] for explaining it this way

Example: Atomic counters

```
_Atomic(int) packet_count;

void
recv_packet(...)
{
        ⋮
  atomic_fetch_add_explicit(&packet_count, 1,
                            memory_order_relaxed);
        ⋮
}
```

- **Need to count packets accurately**
- **Don't need to order other memory accesses across threads**
- **Relaxed memory order can avoid unnecessary overhead**
  - Depending on hardware, of course (not x86)

Example: Producer, consumer 1

```c
struct message msg_buf;
_Atomic(_Bool) msg_ready;

void send(struct message *m) {
  msg_buf = *m;
  atomic_thread_fence(memory_order_release);
  /* Prior loads+stores happen before subsequent stores */
  atomic_store_explicit(&msg_ready, 1,
                        memory_order_relaxed);
}

struct message *recv(void) {
  _Bool ready = atomic_load_explicit(&msg_ready,
                                     memory_order_relaxed);
  if (!ready)
    return NULL;
  atomic_thread_fence(memory_order_acquire);
  /* Prior loads happen before subsequent loads+stores */
  return &msg_buf;
}
```


Example: Producer, consumer 2

```c
struct message msg_buf;
_Atomic(_Bool) msg_ready;

void send(struct message *m) {
  msg_buf = *m;
  atomic_store_explicit(&msg_ready, 1,
                        memory_order_release);
}

struct message *recv(void) {
  _Bool ready = atomic_load_explicit(&msg_ready,
                                     memory_order_acquire);
  if (!ready)
    return NULL;
  return &msg_buf;
}
```

- **This is potentially faster than previous example**
  - E.g., other stores after `send` can be moved before `msg_buf`

Example: Spinlock

```c
void
spin_lock(atomic_flag *lock)
{
  while(atomic_flag_test_and_set_explicit(lock,
                                  memory_order_acquire))
    ;
}

void
spin_unlock(atomic_flag *lock)
{
  atomic_flag_clear_explicit(lock, memory_order_release);
}
```


Outline

1. Cache coherence – the hardware view
2. Synchronization and memory consistency review
3. C11 Atomics
4. Avoiding locks

Recall producer/consumer (lecture 3)

```c
/* PRODUCER */
for (;;) {
  item *nextProduced
    = produce_item ();

  mutex_lock (&mutex);
  while (count == BUF_SIZE)
    cond_wait (&nonfull,
               &mutex);

  buffer[in] = nextProduced;
  in = (in + 1) % BUF_SIZE;
  count++;
  cond_signal (&nonempty);
  mutex_unlock (&mutex);
}
```

```c
/* CONSUMER */
for (;;) {
  mutex_lock (&mutex);
  while (count == 0)
    cond_wait (&nonempty,
               &mutex);

  nextConsumed = buffer[out];
  out = (out + 1) % BUF_SIZE;
  count--;
  cond_signal (&nonfull);
  mutex_unlock (&mutex);

  consume_item (nextConsumed);
}
```


Eliminating locks

- **One use of locks is to coordinate multiple updates of single piece of state**
- **How to remove locks here?**
  - Factor state so that each variable only has a single writer
- **Producer/consumer example revisited**
  - Assume you have sequential consistency (or need fences)
  - Assume one producer, one consumer
  - Why do we need `count` variable, written by both?
    To detect buffer full/empty
  - Have producer write `in`, consumer write `out`
  - Use `in`/`out` to detect buffer state
  - But note next example busy-waits, which is less good

Lock-free producer/consumer

```
void producer (void *ignored) {
    for (;;) {
        item *nextProduced = produce_item ();
        while (((in + 1) % BUF_SIZE) == out) thread_yield ();
        buffer[in] = nextProduced;
        atomic_thread_fence(memory_order_release);
        in = (in + 1) % BUF_SIZE;
    }
}

void consumer (void *ignored) {
    for (;;) {
        while (in == out) thread_yield ();
        atomic_thread_fence(memory_order_acquire);
        nextConsumed = buffer[out];
        out = (out + 1) % BUF_SIZE;
        consume_item (nextConsumed);
    }
}
```

[Note fences not actually needed because no relaxed atomics]

Non-blocking synchronization

- **Design algorithm to *avoid critical sections***
  - Any threads can make progress if other threads are preempted
  - Which wouldn't be the case if preempted thread held a lock
- **Requires that hardware provide the right kind of atomics**
  - Simple test-and-set is insufficient
  - Atomic compare and swap is good: `CAS (mem, old, new)`
    If `*mem == old`, then swap `*mem`⟷`new` and return `true`, else `false`
- **Can implement many common data structures**
  - Stacks, queues, even hash tables
- **Can implement any algorithm on right hardware**
  - Need operation such as atomic compare and swap
    (has property called *consensus number* $= \infty$ [Herlihy])
  - Entire kernels have been written without locks [Greenwald]

Example: non-blocking stack

```
struct item {
  /* data */
  struct item *next;
};
typedef struct item *stack_t;

void atomic_push (stack_t *stack, item *i) {
  do {
    i->next = *stack;
  } while (!CAS (stack, i->next, i));
}

item *atomic_pop (stack_t *stack) {
  item *i;
  do {
    i = *stack;
  } while (!CAS (stack, i, i->next));
  return i;
}
```


Wait-free stack issues

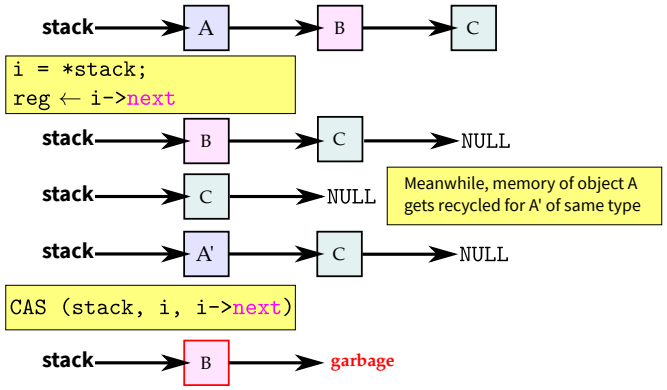

- **"ABA" race in pop if other thread pops, re-pushes i**
  - Can be solved by counters or hazard pointers to delay re-use

"Benign" races

- **Could also eliminate locks by having race conditions**
- **Maybe you think you care more about speed than correctness**

```
++hits; /* each time someone accesses web site */
```

- **Maybe you think you can get away with the race**

```
if (!initialized) {
  lock (m);
  if (!initialized) {
    initialize ();
    atomic_thread_fence (memory_order_release); /* why? */
    initialized = 1;
  }
  unlock (m);
}
```

- **But don't do this [Vyukov], [Boehm]! Not benign at all**
  - Get undefined behavior—akin to out-of-bounds array access in C11
  - If needed for efficiency, use relaxed-memory-order atomics

Read-copy update [McKenney]

- **Some data is read way more often than written**
  - Routing tables consulted for each forwarded packet
  - Data maps in system with 100+ disks (updated on disk failure)
- **Optimize for the common case of reading without lock**
  - E.g., global variable: `routing_table *rt;`
  - Call `lookup (rt, route);` with no lock
- **Update by making copy, swapping pointer**

```
routing_table *newrt = copy_routing_table (rt);
update_routing_table (newrt);
atomic_thread_fence (memory_order_release);
rt = newrt;
```

- **Is RCU really safe? Stay tuned next lecture…**

Next class

- **The exciting conclusion of RCU**
  - Spoiler: safe on all architectures except on alpha
- **Building a better spinlock**
- **What interface should kernel provide for sleeping locks?**
- **Deadlock**
- **Scalable interface design**