Keeping communications secret

- **Encryption guarantees secrecy**
- **Symmetric encryption**
  - Encryption algorithm consists of two functions E and D
  - To communicate secretly, parties share secret key K
  - Given message M, $E(K, M) \rightarrow C$, $D(K, C) \rightarrow M$
  - M is plaintext, C is ciphertext
  - Attacker cannot derive M from C without K

Types of encryption

- **One time pad algorithm**
  - Share a completely random string P
  - Encrypt M by XORing with P: $C \leftarrow M \oplus P$
  - Decrypt by XORing again: $M \leftarrow C \oplus P$
- **Stream ciphers – pseudo-random pad**
  - Generate pseudo-random stream of bits from short key
  - Encrypt/decrypt by XORing as with one-time pad
  - But **NOT** one-time PAD! (People who claim so are frauds!)
- **Most common algorithm type: Block cipher**
  - Operates on fixed-size blocks (e.g., 64 or 128 bits)
  - Maps plaintext blocks to same size ciphertext blocks

Example stream cipher (RC4)

- **Initialization:**
  - $S[0 \ldots 255] \leftarrow$ permutation $\langle 0, \ldots 255, \rangle$
    (based on key—specifics omitted)
  - $i \leftarrow 0$; $j \leftarrow 0$
- **Generating pseudo-random bytes:**

$$
\begin{aligned}
& i \leftarrow (i + 1) \bmod 256; \\
& j \leftarrow (j + S[i]) \bmod 256; \\
& \textbf{swap } S[i] \leftrightarrow S[j]; \\
& t \leftarrow (S[i] + S[j]) \bmod 256; \\
& \textbf{return } S[t];
\end{aligned}
$$

Example use of stream cipher

- **Pre-arrange to share secret s with web vendor**
- **Exchange payment information as follows**
  - Send: $\mathrm{Encrypt}(s,$ "Visa card #3273…")
  - Receive: $\mathrm{Encrypt}(s,$ "Order confirmed, have a nice day")
- **Now an eavesdropper can't figure out your Visa #**

Wrong!

- **Let's say an attacker has the following:**
  - $c_1 = \text{Encrypt}(s, \text{“Visa card \#3273...”})$
  - $c_2 = \text{Encrypt}(s, \text{“Order confirmed, have a nice day”})$
- **Now compute:**
  - $m \leftarrow c_1 \oplus c_2 \oplus$ “Order confirmed, have a nice day”
- **Lesson: Never re-use keys with a stream cipher**
  - Similar lesson applies to one-time pads
    (That's why they're called **one-time** pads.)

Example block cipher (blowfish)

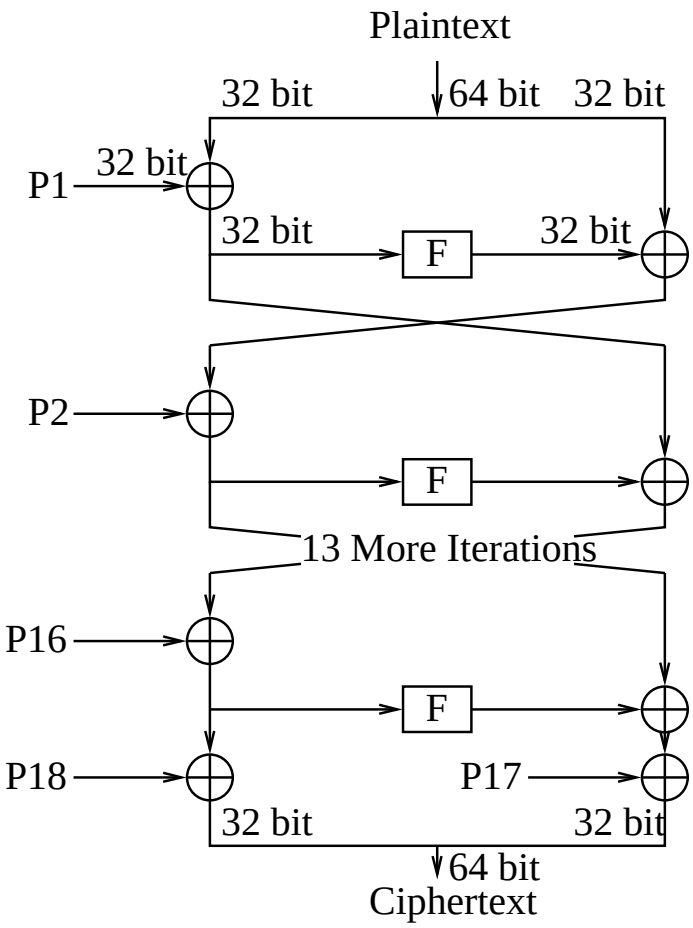

- **Derive F and 18 subkeys from Key—$P_1 \ldots P_{18}$**
- **Divide plaintext block into two halves, L_0 and R_0**
- $R_i = L_{i-1} \oplus P_i$
  $L_i = R_{i-1} \oplus F(R_i)$
- $R_{17} = L_{16} \oplus P_{17}$
  $L_{17} = R_{16} \oplus P_{18}$
- **Output $L_{17}R_{17}$.**

(Note: This is just to give an idea; it's not a complete description)

Using a block cipher

- **In practice, message may be more than one block**
- **Encrypt with ECB (electronic code book) mode:**
  - Split plaintext into blocks, and encrypt separately
  - Attacker can't decrypt any of the blocks
  - Message is secure
- **Distributing a secret key can be expensive**
  - Want to maximize the use of a shared secret key
  - Can encrypt multiple messages, since each is secure
  - This is okay, since it's not a stream cipher

Wrong!

- **Attacker will learn of repeated plaintext blocks**
  - If transmitting sparse file, will know where non-zero regions lie
- **Example: Intercepting military instructions**
  - Most days, send encryption of "nothing to report."
  - On eve of battle, send "attack at dawn."
  - Attacker will know when battle plans are being made
- **Solution: Cipher-block chaining**
  - Ensures repeated blocks are not encrypted the same

Cipher-block chaining

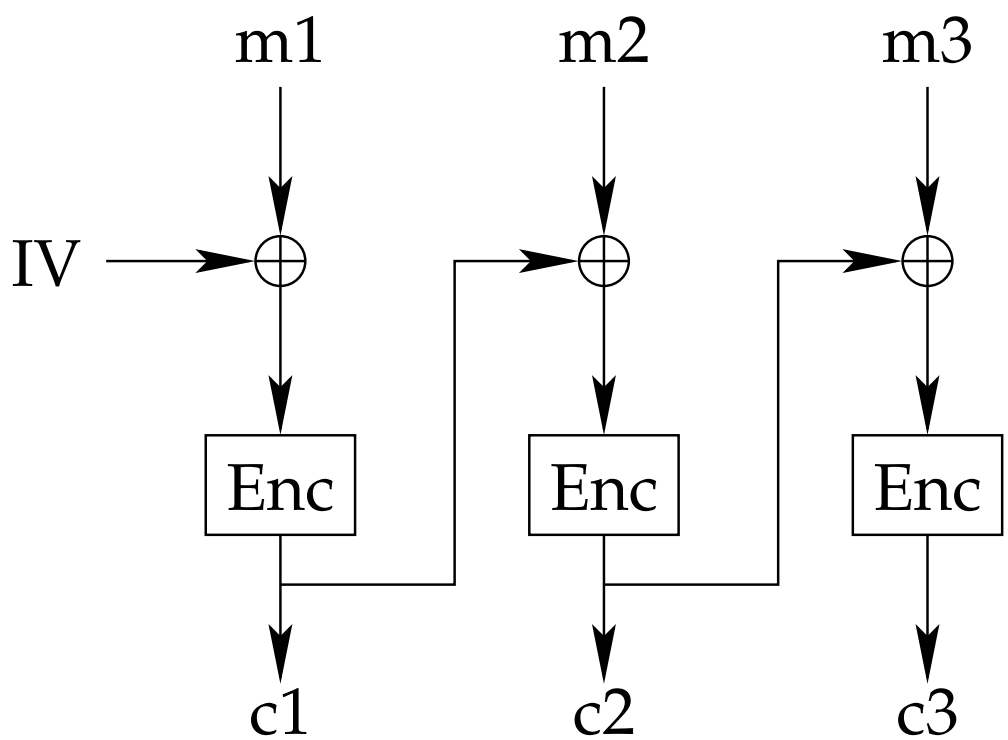

Given a shared key, can you transmit files securely over the Internet if you encrypt them in CBC mode?

Problem: Integrity

- **Attacker can tamper with messages**
  - E.g., corrupt a block to flip a bit in next
- **What if you delete original file after transfer?**
  - Might have nothing but garbage at recipient
- **Encryption does not guarantee integrity**
  - A system that uses encryption alone (no integrity check) is often incorrectly designed.
  - Exception: Cryptographic storage (to protect disk if stolen)

Message authentication codes

- **Message authentication codes (MACs)**
  - Sender & receiver share secret key K
  - On message m, $\mathrm{MAC}(K, m) \rightarrow v$
  - Attacker cannot produce valid $\langle m, v \rangle$ without K
- **To send message securely, append MAC**
  - Send $\{m, \mathrm{MAC}(K, m)\}$, where m could be ciphertext, $E(K', M)$
  - Receiver of $\{m, v\}$ checks $v \stackrel{?}{=} \mathrm{MAC}(K, m)\}$
- **Careful of Replay – don't believe previous** $\{m, v\}$

Cryptographic hashes

- **Hash arbitrary-length input to fixed-size output**
  - Typical output size 128 or 160 bits
  - Cheap to compute on large input (faster than network)
- **Collision-resistant: Computationally infeasible to find** $x \neq y,\ H(x) = H(y)$
  - Many such collisions exist
  - No one has been able to find one, even after analyzing the alrogithm
- **Several hashes in common use (SHA-1, MD5)**

Applications of cryptographic hashes

- **Small hash uniquely specifies large data**
  - Hash a file, remember the hash value
  - Recompute hash later, if same value no tampering
  - Hashes often published for software distribution
- $\mathbf{HMAC}(K, m) = H(K \oplus \mathsf{opad}, H(K \oplus \mathsf{ipad}, m))$
  - H is a cryptographic hash like SHA-1
  - ipad is 0x36 repeated 64 times, opad 0x5c repeated 64 times

Order of Encryption and MACs

- **Should you Encrypt then MAC, or vice versa?**
- **MACing encrypted data is always secure**
- **Encrypting Data+MAC may not be secure!**
  - Consider the following secure, but stupid encryption alg
  - Transform $m \rightarrow m'$ by mapping each bit to two bits:
    Map $0 \rightarrow 00$ (always), $1 \rightarrow \{10, 01\}$ (randomly pick one)
  - Now encrypt m' with a stream cipher to produce c
  - Attacker flips two bits of c—if msg rejected, was 0 bit in m

Public key encryption

- **Three randomized algorithms:**
  - *Generate* – $G(1^k) \rightarrow K, K^{-1}$
  - *Encrypt* – $E(K, m) \rightarrow \{m\}_K$
  - *Decrypt* – $D(K^{-1}, \{m\}_K) \rightarrow m$
- **Provides secrecy, like conventional encryption**
  - Can't derive m from $\{m\}_K$ without knowing K^{-1}
- **Encryption key K can be made public**
  - Can't derive K^{-1} from K
  - Everyone can use the same public key to encrypt messages for one recipient.

The RSA algorithm

- **Generation:**
  - Pick two primes, p and q, let $N = pq$
  - Pick random e that does not divide $(p-1)(q-1)$
  - Compute d such that $de \equiv 1 \pmod{(p-1)(q-1)}$
  - Public key: N, e, private key N, d
- **Facts:**
  - If $m \in \mathbf{Z}_N^*$, then $(m^e \bmod N)^d \bmod N = m$.
  - For large enough p, q and random m, Given N, e, and $m^e \bmod N$, No one knows how to find m if they don't already know p, q, or d.
- **To encrypt a message, just treat bits as number and computer $m^e \bmod N$.**

Wrong!

- **What if message is from a small set (yes/no)?**
- **What if I want to outbid you in secret auction?**
  - I take your encrypted bid c and submit $c\,(11/10)^e \bmod n$.
- **What if there's some protocol in which I can learn other message decryptions?**
  - E.g., people escrow ciphertexts, and get them back under certain circumstances (if an employee is fired or dies)
  - I take your ciphertext $c = m^e \bmod n$, and escrow $c2^e \bmod n$.
  - After I'm fired, my coconspirator gets back $2m$
- **Many people make this mistake, including SSL**
  - SSL didn't return decryptions, bur error messages had some information

Notions of security

- **How do design systems using RSA?**
  - You don't want to think about interactions between your error messages, modular exponentiation, and lattice theory.
- **A PKS is adaptive chosen ciphertext secure if**
  - No attacker A can win the following game with probability more than $1/2$+negligible:
  - A can first ask for arbitrary messages to be decrypted
  - A then produces two messages, m_0 and m_1
  - The good guy flips a coin $b \leftarrow \{0, 1\}$, returns $c = E(K, m_b)$.
  - A can ask for any messages except c to be decrypted
  - A guesses the value of b

Practical solution: OAEP+ (Shoup)

- **Transforms plaintext M into number M' for RSA:**

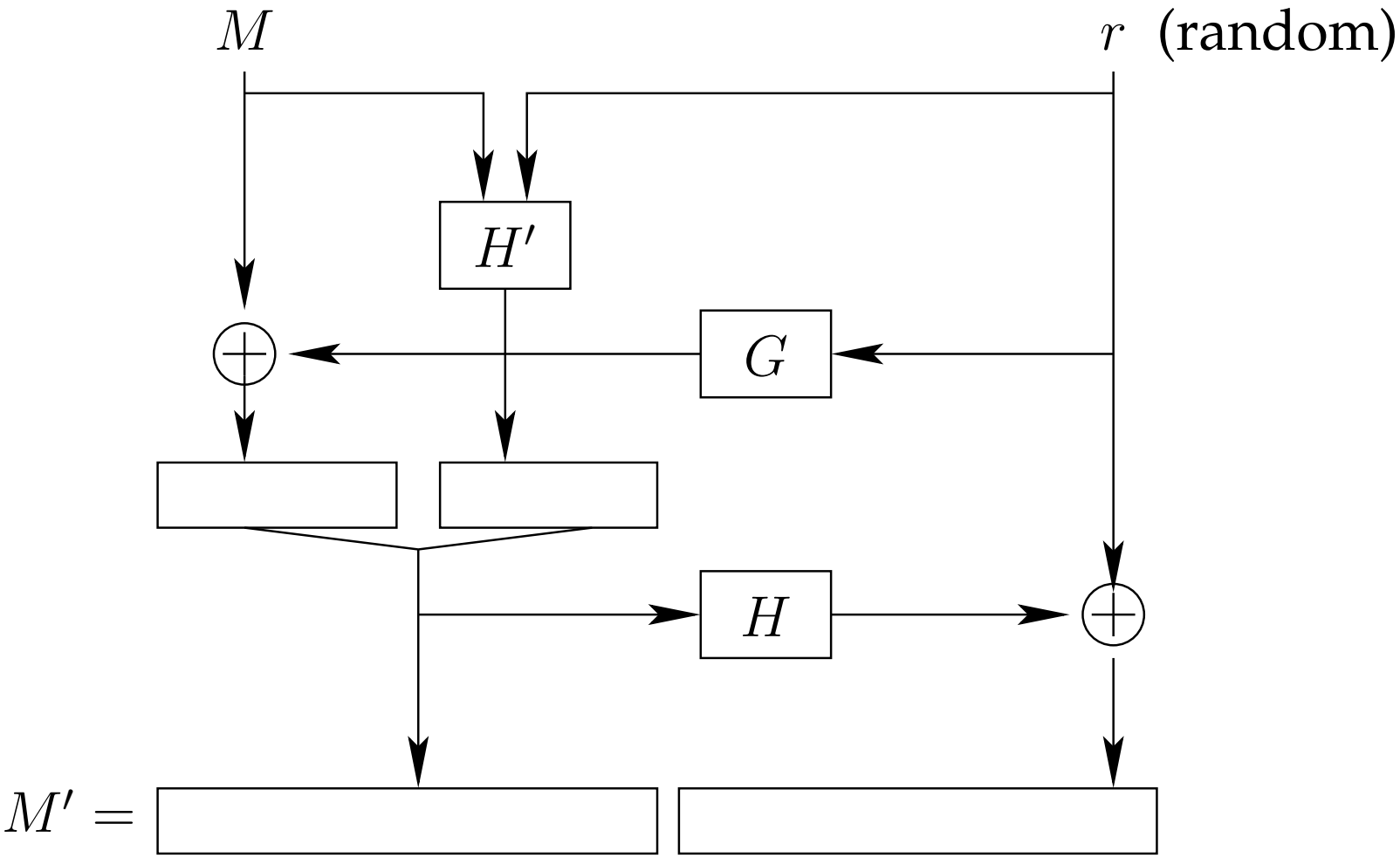

- **Not provable, but heuristically secure**

Digital signatures

- **Three (randomized) algorithms:**
  - *Generate* – $G(1^k) \rightarrow K, K^{-1}$
  - *Sign* – $S\left(K^{-1}, m\right) \rightarrow \{m\}_{K^{-1}}$
  - *Verify* – $V\left(K, \{m\}_{K^{-1}}, m\right) \rightarrow \{\mathbf{true}, \mathbf{false}\}$
- **Provides integrity, like a MAC**
  - Cannot produce valid $\langle m, \{m\}_{K^{-1}} \rangle$ pair without K^{-1}
- **Many keys support both signing & encryption**
  - But Encrypt/Decrypt and Sign/Verify different algorithms!
  - Common error: Sign by "encrypting" with private key

Cost of cryptographic operations

Operation	msec
Encrypt	0.18
Decrypt	6.60
Sign	6.71
Verify	0.03

[1,280-bit Rabin-Williams keys on 3 GHz Pentium IV]

- **Cost of public key algorithms significant**
  - Encryption only on small messages (< size of key)
  - Signature cost relatively insensitive to message size
- **In contrast, symmetric algorithms much cheaper**
  - Symmetric can encrypt+MAC faster than 100Mbit/sec LAN

Hybrid schemes

- **Use public key to encrypt symmetric key**
  - Send message symmetrically encrypted: $\{\text{msg}\}_{K_S}, \{K_S\}_{K_P}$
- **Use PK to negotiate secret session key**
  - E.g., Client sends server $\{K_1, K_2, K_3, K_4\}_{K_P}$
  - Client sends server: $\{\{m_1\}_{K_1}, \text{MAC}(K_2, \{m_1\}_{K_1})\}$
  - Server sends client: $\{\{m_2\}_{K_3}, \text{MAC}(K_4, \{m_2\}_{K_3})\}$
- **Often want mutual authentication (client & server)**
  - Or more complex, user(s), client, & server

Server authentication

- **An approach: Use public key cryptography**
  - Give client public key of server
  - Lets client authenticate secure channel to server
- **Problem: Key management problem**
  - How to get server's public key?
  - How to know the key is really server's?

The danger: Attackers impersonating servers

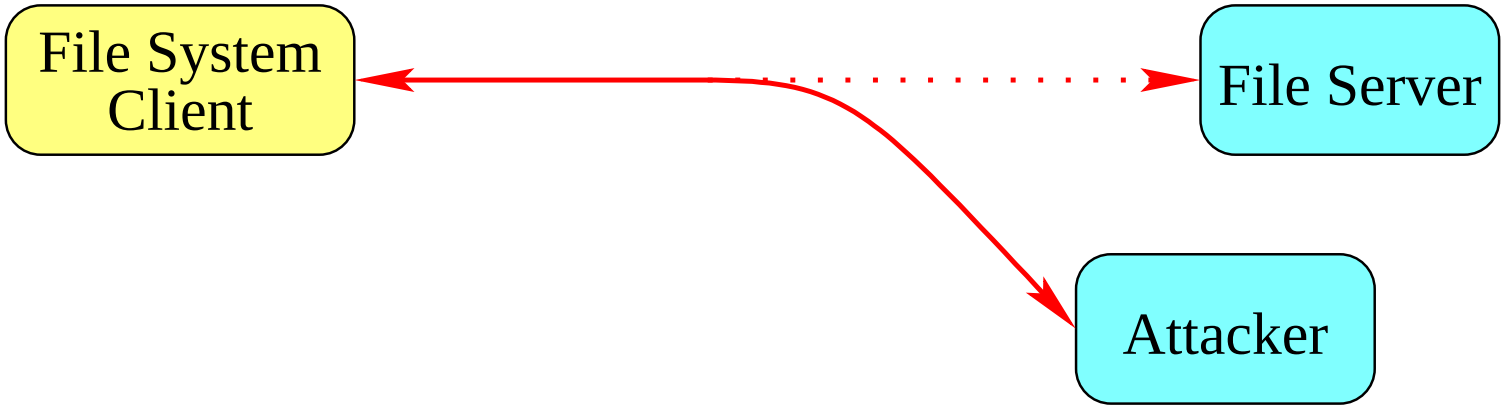

- **File system example:**
  - Attacker pretends to be server, gives its own public key
  - Attacker substitutes modified data for file
  - User writes sensitive file to fake server

Man in the middle attacks

- **Attacker might not look like server**
  - User would notice if file system didn't contain right files
- **Man in the middle attack foils user:**
  - Attacker emulates server when talking to client
  - Attacker emulates client when talking to server
  - Attacker passes most messages through unmodified
  - Attacker substitutes own public key for client's & server's
  - Attacker records secret data, or tampers to cause damage

Key management

- **Put public keys in the phone book**
  - How do you know you have the real phone book?
  - How is a program supposed to use phone book www.phonebook.com? (are you talking to real web server)
- **Exchange keys with people in person**
- **"Web of trust" – get keys from friends you trust**

Certification authorities

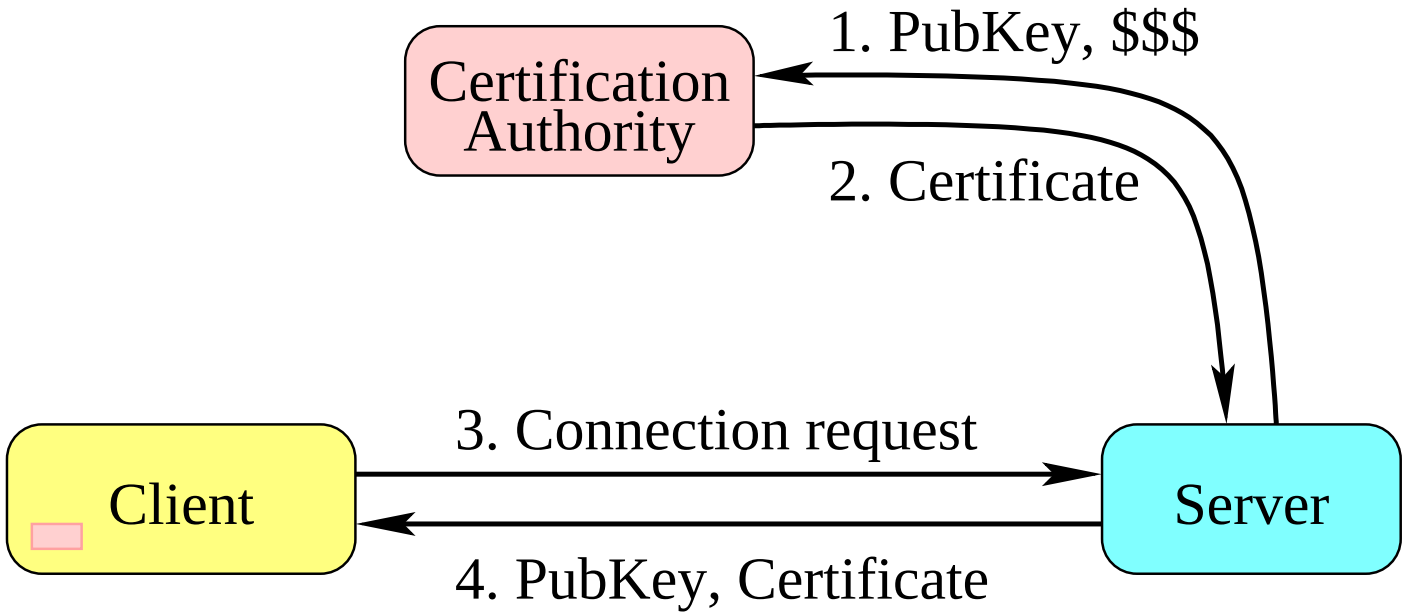

- **Everybody trusts some certification authority**
- **Everybody knows authority's public key**
  - E.g., built into web browser

Hierarchy with local trust

- **To get from cs.nyu.edu to mit.edu:**
  - cs.nyu.edu knows key for nyu.edu
  - nyu.edu knows key for edu/root
  - root knows key for mit.edu
- **To get within cs.nyu.edu:**
  - No need to trust outside authorities

Passwords

- **Many systems grant access through a password**
- **How to implement? Example:**
  - Server stores user's password
  - Client connects to server, sends username, password
  - Server compares password to stored version
  - Grants access if they match
- **Is this a good approach?**

Weaknesses

- **How do you know you are talking only to server**
  - Attacker might be eavesdropping on Ethernet
  - Attacker might mess with DNS (or IP routing) so you talk to wrong machine
- **Eavesdropper will just read your password off the network**
- **Server knows your plaintext password**
  - Attacker or server operator can modify login record it
  - Bad because people re-use passwords on multiple machines

s/key password authentication

- **Goal: Protect against passive eavesdroppers**
  - Also: Minimize harm of bad clients (e.g., public terminals)
- **Idea: One time passwords, not valid after snooped**
- **Algorithm takes user's real password, p, a random "salt" s, and server machine name m**
  - First one time password is $H^{(100)}(p, m, s)$ (for one way hash H)
  - Next password is $H^{(99)}(p, s)$, etc.
  - After 99 logins, must change salt or password
- **Benefit: Very convenient**
  - Carry list of one-time passwords, calculate on palm pilot

Weaknesses

- **Still vulnerable to man-in-the middle**
  - Attacker impersonates server
  - Re-sends one-time password to real server
- **Vulnerable to off-line password guessing**
  - Attacker sees s and $H^{(n)}(p, s)$
  - Can verify guesses of p off-line – check against dictionary of common passwords
  - H not very expensive (should be $H^{(n)}(G(p, s))$ for expensive G—or maybe users should crank n)
- **Bad client can compromise session**
  - Before logout, can insert command to create back door:
    `echo 1024 35 145...3 badguy >> .ssh/authorized_keys`

Password-derived public keys

- **Derive public key from user's password**
  - E.g., use password as seed for pseudo-random generator
  - Client can regenerate private key given password
- **Server stores public key for each user**
- **Use public key authentication, E.g.:**
  - $S \rightarrow C : N_S$
  - $C \rightarrow S : K_u, \{C, S, K_S, u, \text{session}, N_S\}_{K_u^{-1}}$
  - K_S is server public key, used to authenticate server
  - Server checks sig, looks up pubkey K_u for credentials

Weaknesses

- **No salt**
  - Users with same password will have same public key
- **No cost parameter**
  - Can't take too long to log in
  - But over time generating key will get faster
- **Public key is just like password hash**
  - Eavesdropper will see key, can mount off-line attack
- **No authentication of server to user**
  - W/o accessing server, attacker can pretend server is giving bad answers

MAC of server public key

- **User chooses password p. Server stores:**
  - $h \leftarrow H(p, \text{servername})$ (where H is hash with parameterizable cost)
- **Server authenticates its public key to user with secret h**
  - $S \rightarrow C : \text{MAC}(h, K_S)$
  - Client can establish secure channel using K_S

Weaknesses

- **Still vulnerable to offline password guessing**
- **No forward secrecy**
  - Attacker can record encrypted communications
  - One year later, breaks into server, gets private key
  - Can now decrypt last year's messages!

Secure password protocols

- **Purpose of secure password protocol:**
  - Generate strong shared secret from user-chosen password
  - Use secret as key for mutually authenticated session
- **Goals of the SRP protocol**
  - Network attacker should be unable learn anything that will allow an off-line guessing attack
  - Forward secrecy
  - Server knows nothing plaintext-equivalent
- **Warning: SRP has not been proven correct**
  - No known bugs in SRP, but provably correct protocols exist
  - What follows is an *informal* argument about why SRP might be secure

Background: Diffie-Hellman key exchange

- **An unauthenticated key exchange protocol**
  - Provides forward secrecy against a passive adversary
- **The discrete log problem:**
  - Let p be a prime and g a generator of $\mathbf{Z}_p^*$
  - Given $x \in \mathbf{Z}_{p-1}$, easy to compute g^x from x, inverse hard
- **Diffie-Hellman protocol, given g and p**
  - A picks random x, sends B g^x
  - B picks random y, sends A g^y
  - A and B use $H(g^{xy})$ as session key
- **Note: Breaking DH may be easier than discrete log**

SRP protocol

- **User knows** p**, Server knows** $s, g^{H(s,p)}$
- **Get parameters.** $U \rightarrow S : U$**;** $S \rightarrow U : s, N, g$
- **User picks** a**.** $U \rightarrow S : U, g^a$
- **Server picks** b, u**.** $S \rightarrow U : s, 3g^{H(s,p)} + g^b, u$
- **User computes:** $K = H\left(\left(g^b\right)^{(a+uH(s,p))}\right)$
- **Server computes:** $K = H\left(g^a\left(g^{H(s,p)}\right)^u\right)^b$
- **In either case:** $K = H\left(g^{ab}g^{buH(s,p)}\right)$

Informal analysis

- **No obvious way for U to get K without p**
- **S doesn't know p**
  - Even if S's secret $g^{H(s,p)}$ stolen, thief can't impersonate user without mounting off-line guessing attack
- **No obvious way to mount off-line guessing attack**
  - Suppose attacker impersonates user, then learns K
    Will know a, s, u, $3g^{H(s,p)} + g^b$, and $H(g^{ab} g^{buH(s,p)})$
    No obvious way to validate guess of p
  - Suppose attacker impersonates server and learns K
    Will know s, B, g^a, u, and $H\left(\left(B - 3g^{H(s,p)}\right)^{a+uH(s,p)}\right)$
    No obvious way to validate guess of p

Secure password protocols in practice

- **Passwords are sufficient for mutual authentication**
  - A distributed system in which a user types a password should never be susceptible to a man in the middle attack!
  - If user establishes a password in person, no need for PKI to contact server
- **Consider adding cost parameter c to algorithms**
  - For example hash password 2^c times
  - $U \rightarrow S : U, g^a$
  - $S \rightarrow U : s, c, g^{H^{2^c}(s,p)} + g^b, u$