Initializing `sockaddr_in` from hostname

```
void
mksin (struct_sockaddr *sinp, const char *host, int port)
{
  struct hostent *hp;

  bzero (sinp, sizeof (*sinp));
  sinp->sin_family = AF_INET;
  sinp->sin_port = htons (port);
  if (!(hp = gethostbyname (host))) {
    fprintf (stderr, "%s: bad host name\n", host);
    exit (1);
  }
  sinp->sin_addr = *(in_addr *) hp->h_addr;
  /* or:  */
  memcpy (&sinp->sin_addr, hp->h_addr, sizeof (sinp->sin_addr));
}
```

Generic switch architecture

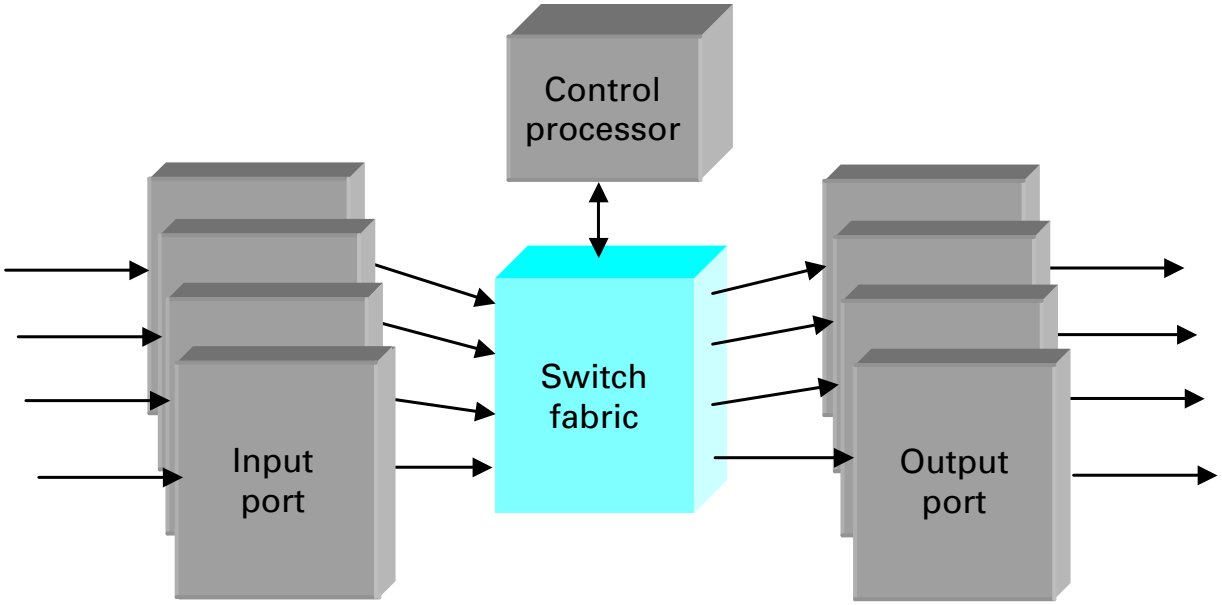

- **Goal: deliver packets from input to output ports**
- **Three potential performance concerns:**
  - Throughput in terms of bytes/time
  - Throughput in terms of packets/time
  - Latency

Shared bus switch

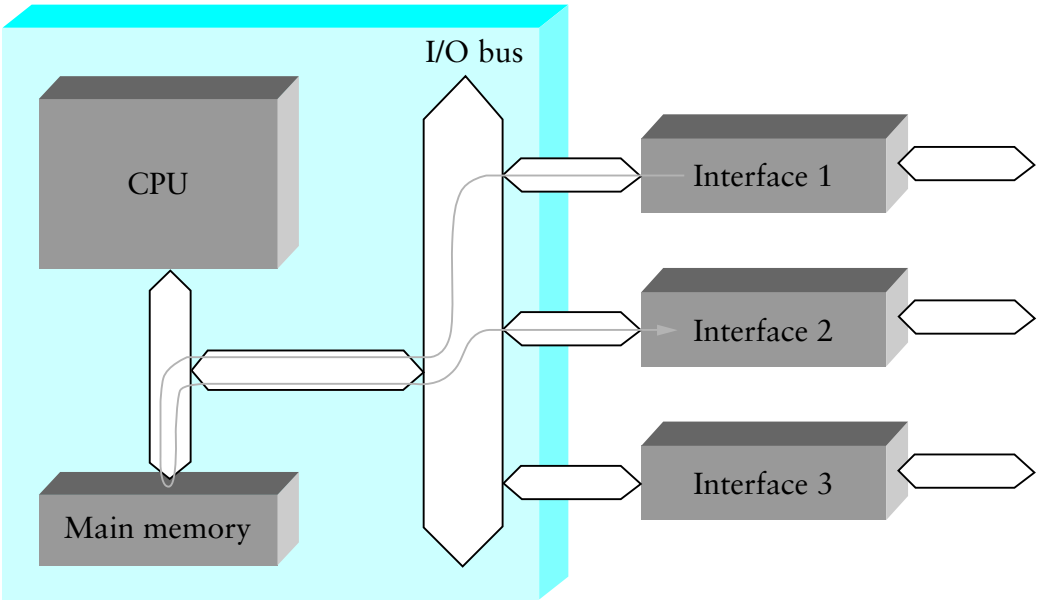

- **Shared bus – like your PC**
  - NIC DMAs packet to memory over I/O bus
  - CPU examines pkt header, sends to dest NIC over bus
  - I/O bus is serious bottleneck
  - For small packets, CPU may be limited, too
- **Shared memory – similar, has memory bottleneck**

Crossbar switch

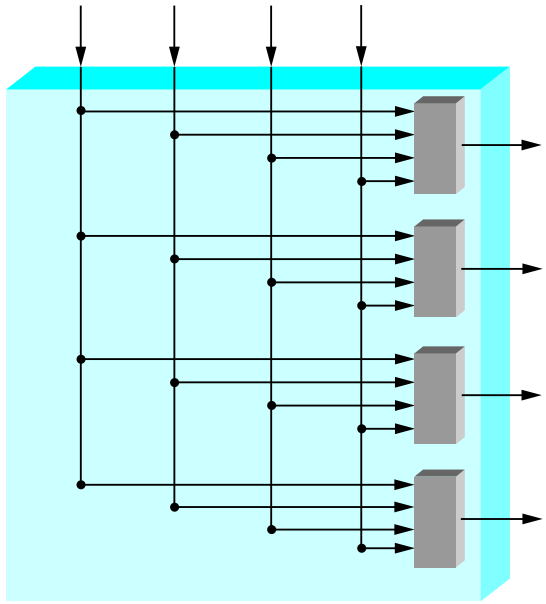

- **Can connect any input to any output**
  - Trivially allows any input→output permutation
  - More than one input to same output requires trickery

Self-routing switches

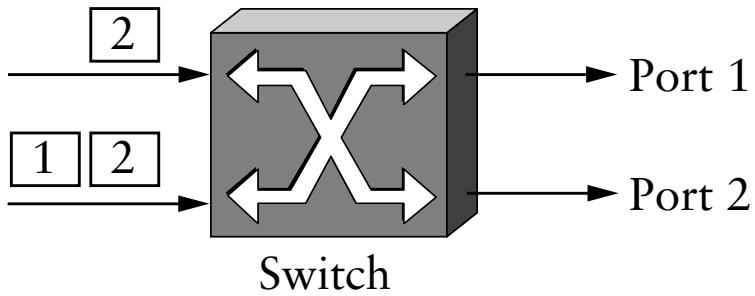

- **Idea: Build up switch out of 2×2 elements**
- **Each packet contains a "self-routing header"**
  - For each switch along the way, specifies the output
- **Must somehow compute a path when introducing packet**
  - Is there more than one path to chose from?
  - Will path collide with another packet?
- **Easy to implement stages once path computed**

Banyan networks

- **A Banyan network has exactly one path from any input port to a given ouput port**
  - Example: Each stage can flip one bit of the port number
- **Easy to compute paths**
- **Problem: Not all permutations can be routed**
  - Might want $1 \rightarrow 0$ and $7 \rightarrow 1$, but both paths use same link
- **But: Can always route packets if sorted**
  - Leads to *batcher banyan* networks
  - Batcher phase sorts packets before banyan

Example: Banyan network

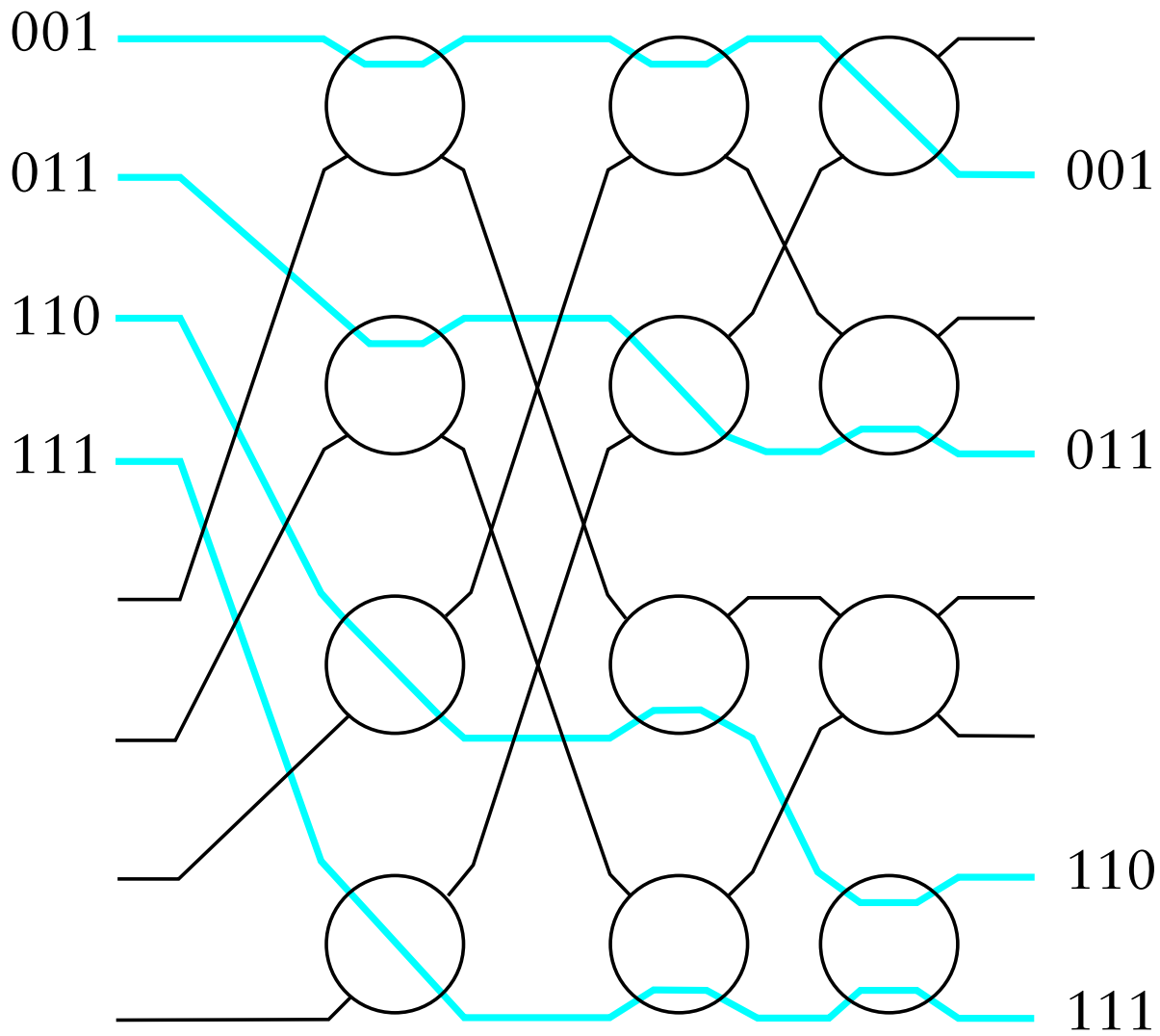

Beneš

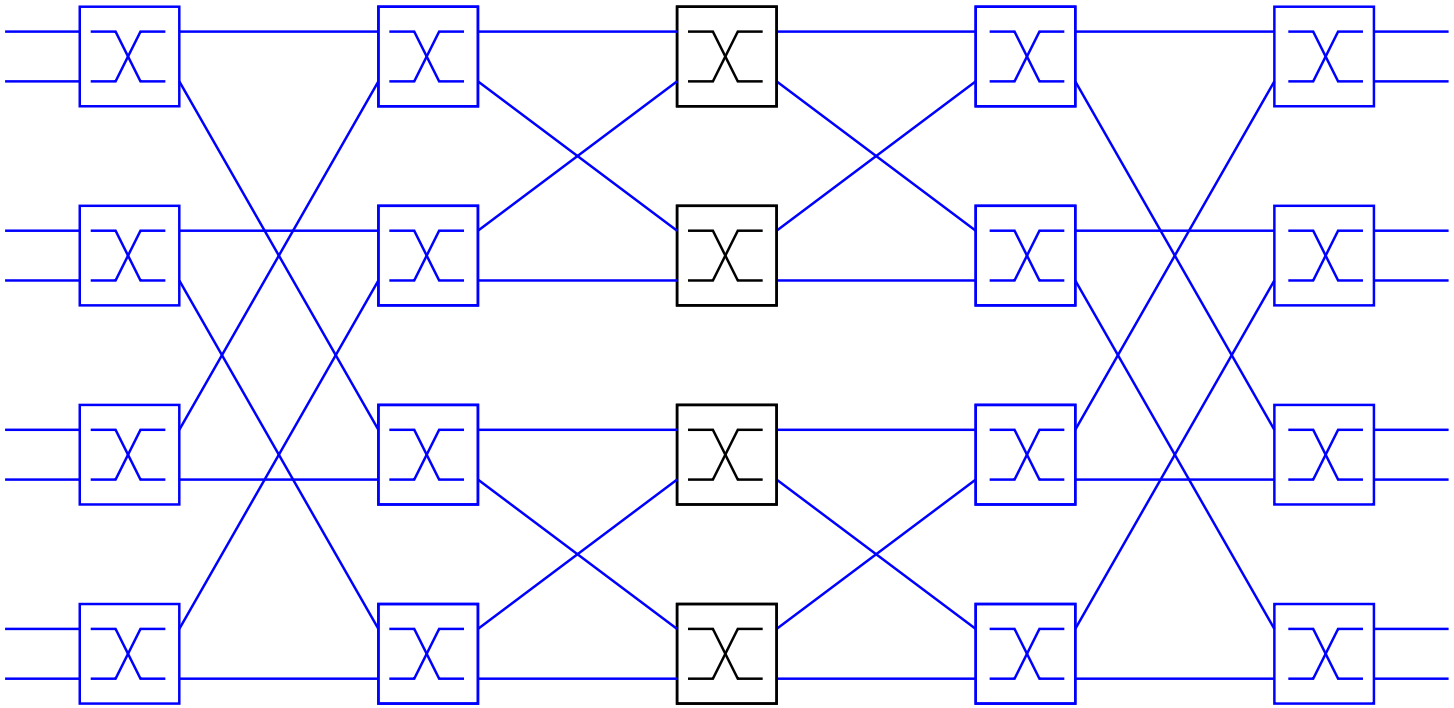

- **Two back to back Banyan networks**
  - Can route any permutation of inputs→outputs
  - (Can be proven by induction on size of network)
- **Unfortunately, figuring schedule is global problem**

Bisection bandwidth

- **Can speak of the bandwidth between sets of ports**
  - Bandwidth is maximum achievable aggregate bandwidth between the two sets
- **Bisection bandwidth is important property of network**
  - Lowest possible bandwidth between equal-sized sets of ports
  - Or almost equal-sized if odd number of ports
- **A network with bad bisection bandwidth may offer poor behavior**
  - Even if no conflict between input and output link utilization, may have internal bottlenecks reducing throughput

Example: Poor bisection bandwidth

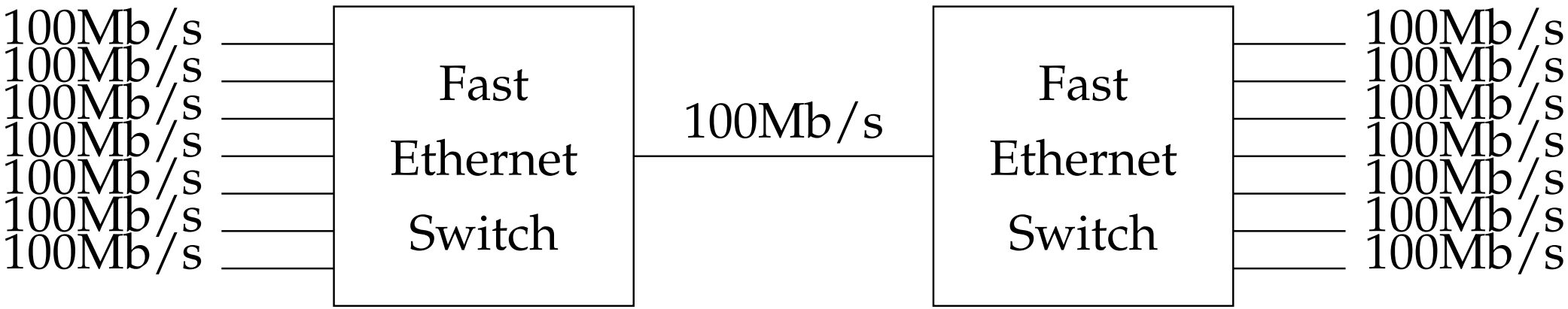

- **Connect two Ethernet switches with Ethernet**
  - Suppose all clients on left, and all servers on right. . .
  - Aggregate bandwidth between all clients and servers only 100Mbit/s

Example: Poor bisection bandwidth 2

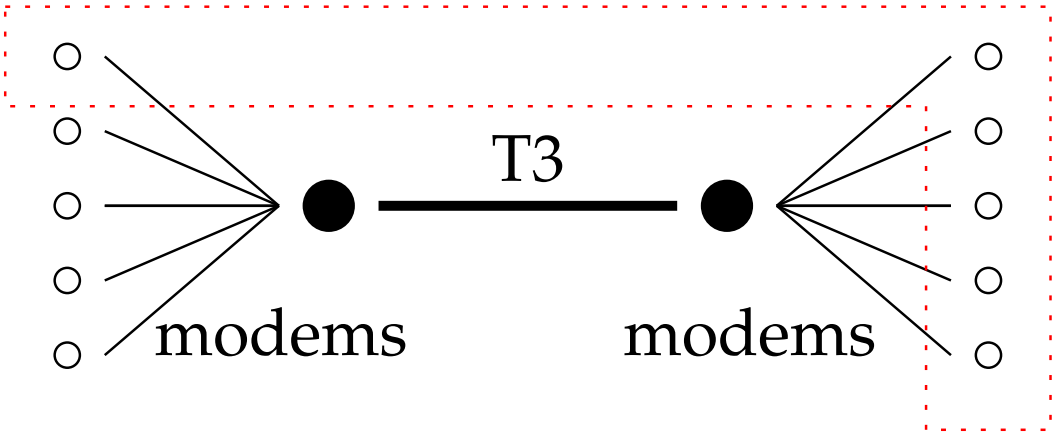

- **Remember it's *worst case* cut**
  - Even with one fat link, don't have to slice down middle
  - Put fat link in one partition, and bisection b/w very small