IO & Disks

CS 140 Feb. 18, 2015

Ali Jose Mashtizadeh

Outline

- Overview
- IDE Disk Driver
- Physical Disks
- Disk Scheduling
- Flash Memory

PC Architecture

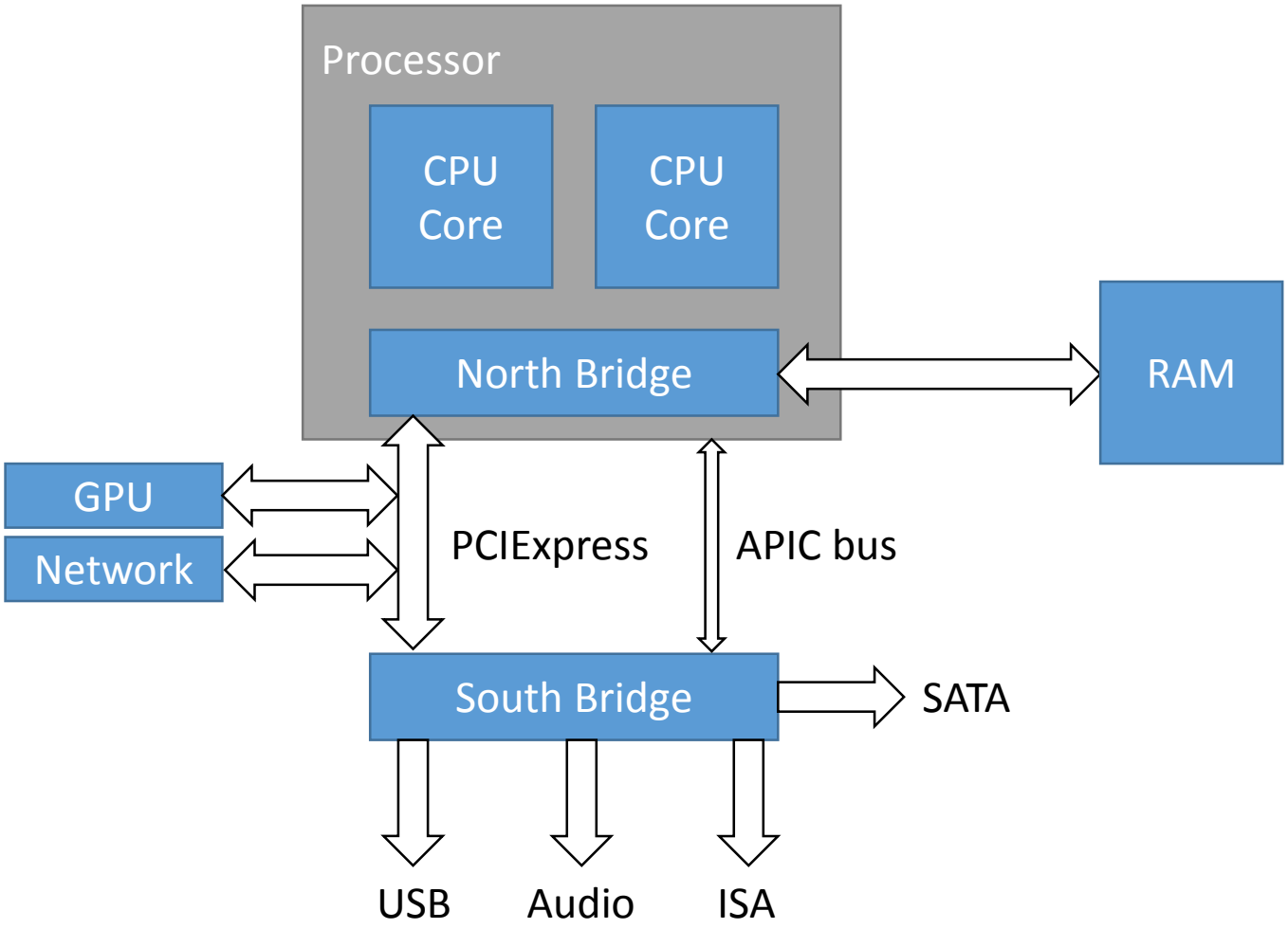

What is memory?

- SRAM – Static RAM
  - Two NOT gates in a circular loop
  - 4 or 6 MOSFETs per bit
  - Fast used for caches
- DRAM – Dynamic RAM
  - 1 Capacitor + 1 MOSFET per bit
  - High density used for main memory
  - Requires periodic refresh to recharge
- VRAM – Video RAM
  - Multiported: Multiple readers/writers

What is an IO bus?

- Interconnect between devices
- Many kinds of busses: PCI, USB, SMBUS, etc.
- Bridges or Bus Controllers convert one to another
- Single Master (e.g. ISA)
  - North bridge can issue reads/writes/DMA to devices
- Multi-master (e.g. PCI)
  - Any device can issue reads/writes to main memory

Device Communication

- Port IO (in/out instructions in x86)
- Memory Mapped IO (PCI, PCIExpress)
- Interrupt Controller
- Direct Memory Access

Port IO

- Using `in/out` instructions
  - uint8_t inb(uint16_t port); // Read Byte
  - void outb(uint16_t port, uint8_t data); // Write Byte
  - Can read or write 1,2, or 4 bytes
- Bulk transfer with `rep` prefix
  - // Read buffer
    void insw(uint16_t port, void *buf, int len);
- Older mechanism used for legacy devices

Memory Mapped IO

- Devices can map memory in for control and/or data
- 0xF00000-0xFFFFFF: ISA Memory Hole
- 0xC0000000-0xFFFFFFFF: PCI Memory Hole
- PCI Express creates a memory hole above 4 GiB

- Reads/Writes to this memory must be uncached

Interrupts

- Advanced Programmable Interrupt Controller
- Local APIC: Per-CPU
  - Deliver interrupts
  - APIC Timer provide timer interrupts
  - Starting up extra cores
  - Delivery of Inter-processor Interrupts (IPIs)
- IO APIC: Per-Machine (typically)
  - Routing interrupts to Local APIC
  - Global interrupt masking
  - Usually 24 interrupts

Direct Memory Access (DMA)

- ISA Device
  - Programmed by the OS
  - Limited to 4 or 8 DMA channels
- PCI Devices
  - Every device can DMA no central control
  - Control structures often read from main memory
- IOAT (Intel’s IO Acceleration Technology)
  - New dedicated DMA engine for bulk data copy
  - Used by the OS often for network acceleration
  - Other vendors have supported extra features

Device Driver Architecture

- Driver provides several entry points to kernel
  - Reset, ioctl, read/write/strategy, interrupt, …
- OS provides callback to entry points
  - Device File System
  - Interrupt Handlers
  - Storage IO Stack

Polling vs Interrupts

- Polling
  - Periodically check device for data
  - Uses CPU when device is idle or not doing much
  - Higher latency depending on poll interval
- Interrupts
  - A small handler is called on a CPU interrupt
  - Lower latency as CPU notified instantly
  - Uses less CPU for idle or low throughput devices
- Downside: Interrupts can block the entire OS
  - Receive Livelock
  - Interrupt Coalescing helps mitigate this
  - Dynamic switching between polling/interrupt mode

IDE Disk Driver

IDE Driver

- IDE or PATA is the older parallel driver interface
- IDE Controllers usually accessed through port IO
- Data transfer through DMA or PIO
- Used with or without interrupts
- Two disks per-controller

PIO IDE Driver

```
IDE_ReadSector(int disk, int off, void *buf) {
  outb(0x1F6, disk == 0 ? 0xE0 : 0xF0); // Select Drive
  IDEWait();
  outb(0x1F2, 512);              // Read length (512 B)
  outb(0x1F3, off);              // LBA Low
  outb(0x1F4, off >> 8);         // LBA Mid
  outb(0x1F5, off >> 16);        // LBA High
  outb(0x1F7, 0x20);             // Read Command
  insw(0x1F0, buf, 256);         // Read 256 Words
}
```

PIO IDE Driver Con't

```
void IDEWait() {
  // Discard status 4 times
  inb(0x1F7); inb(0x1F7);
  inb(0x1F7); inb(0x1F7);
  // Wait for status BUSY flag to clear
  while ((inb(0x1F7) & 0x80) != 0)
  { }
}
```

ATA Commands

- ATA Commands
  - PIO READ (0x20), PIO WRITE (0x30)
  - DMA READ/WRITE
  - FLUSH: Flush disk cache
  - IDENTIFY: Return device specification/features
  - SMART: Drive Diagnostics/Statistics
  - SLEEP/STANDBY: Power Management
- ATAPI Commands:
  - PACKET, IDENTIFY PACKET: For other devices (CDs)

Serial ATA (SATA)

- Serial ATA is the modern disk interface
- Disks compatible with Serial Attached SCSI (SAS)
- Introduces new useful features
  - NCQ, Hotplug, Port Multipliers (PM)
- One device per-port, or multiplexed with PM
- AHCI (Most common controller standard)
  - PCI Device
  - Uses memory mapped IO for issuing IOs
  - Up to 32 ports (no current device has more than 8)

Physical Disks

Anatomy of Disk [Ruemmler]

- Magnetic Platters
  - Multiple magnetic platters
  - Rotate together between 3600-15000 RPM
  - Drive speed not constant, position not certain
- Disk arm
  - Rotates around a pivot together
  - One disk head per recording surface (2xPlatters)
  - Head flying height 3 nm over disk surface
    - Air creates a natural cushion
  - Sensitive to motion and vibration

Disks

Storage Addressing

- Platters divided into concentric *tracks*
- Tracks of a fixed radius form a *cylinder*
- Tracks contain many sectors
- Heads read/write data along cylinders
  - Head adjustment requires reading one platter at a time
  - Significant space for synchronization/error correction
  - Per-sector data previously 512 B, now usually 4 KB
- CHS Addressing: Cylinder-Head-Sector
- LBA Addressing: Logical Block Address

Cylinders, tracks, and sectors

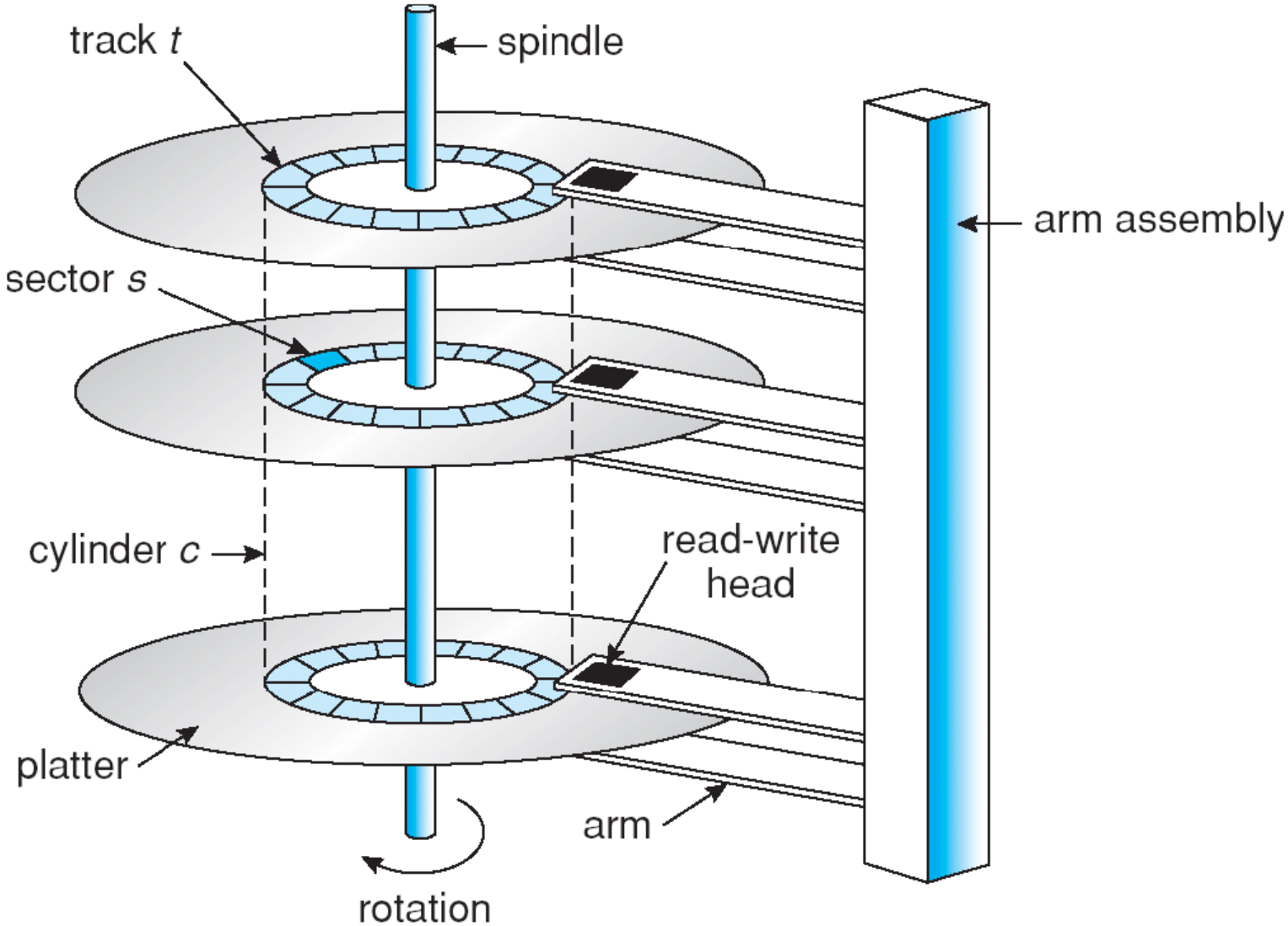

Disk Latency

- Seek Time
  - Time to move head into position
  - Depends on head mechanism
- Rotational Latency
  - Time it takes for disk platter to rotate into position
  - Depends on rotational speed
- Transfer Time
  - Time to read/write actual data
  - Depends on interface, rotational speed, etc
- Average Latency: 2 ms (server) – 15 ms (laptops)
- Other Sources
  - OS/Controller add additional latency
  - Usually small except for flash storage!

Noise and Drive Latency

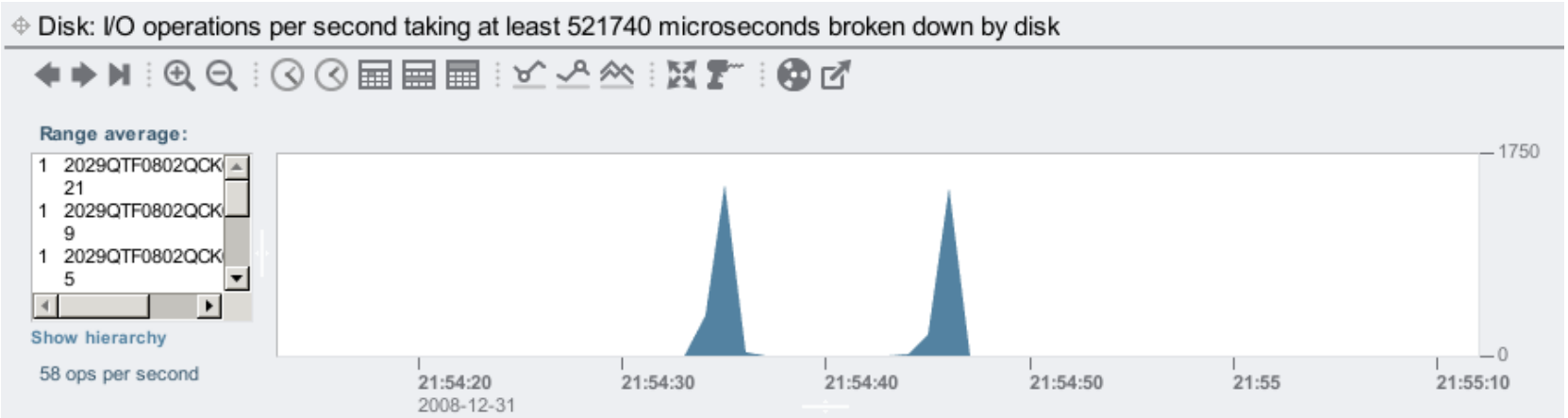

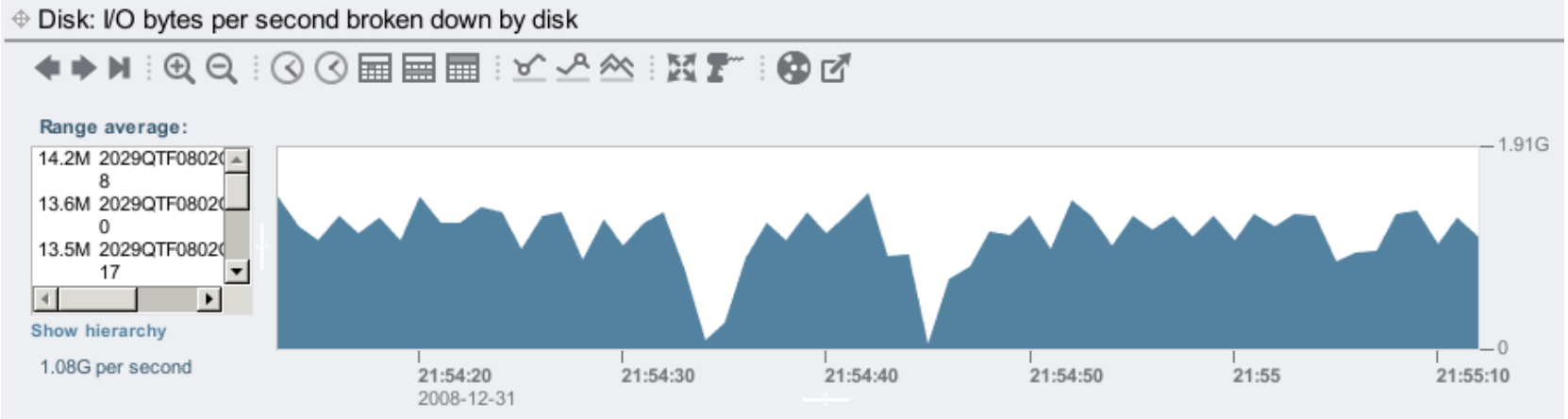

Failures/Bad Sectors

- Drives detect bad sectors based on read issues
- Logical sector may be reallocated elsewhere
- If too many occur, drive errors visible to OS
- SMART allows you to see relocation events

- Bad Reads:
  - Data may decay (bit-rot)
  - Disk will retry reading IO many times
  - May take as long as 15 Minutes!

Disk Scheduling

Optimizing Disk Performance

- Disks involve physical movement and are slow
- Average seek time: 2 ms (server) – 15 ms (mobile)

- File Systems optimize layout (more next week)
  - Reading a file laid out linearly on disk
  - Placing fragments of files near each other
- Operating Systems often schedule IOs for speed
- Disks/Controllers reorder outstanding IOs

Disk Scheduling: FCFS

- First Come First Served (FCFS)
  - Process request in order received
- Advantages:
  - Easy to implement
  - Good fairness
- Disadvantages
  - Cannot exploit request locality
  - Increases average latency, descreasing throughput

FCFS Example

queue = 98, 183, 37, 122, 14, 124, 65, 67

head starts at 53

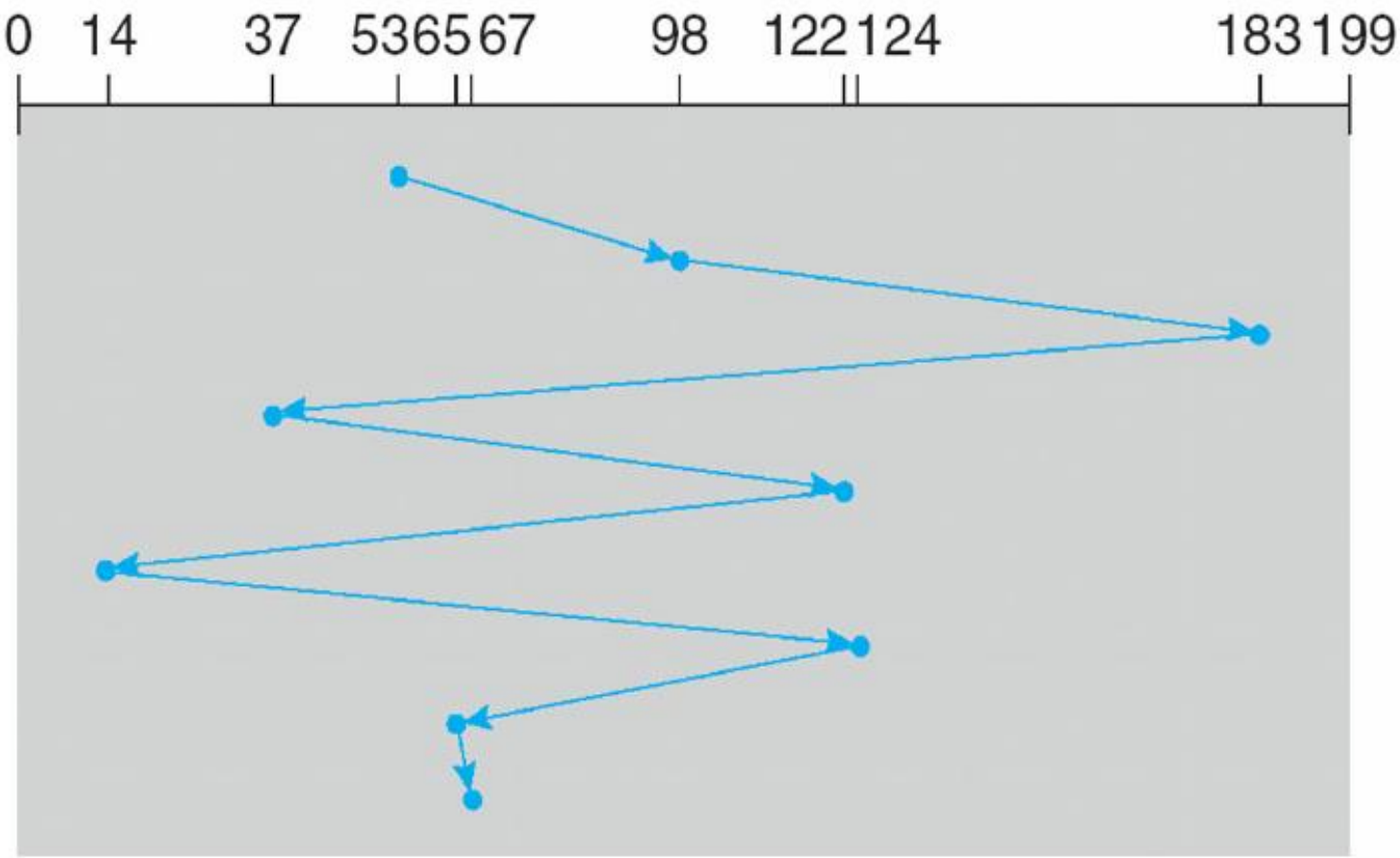

Disk Scheduling: SSTF

- Shortest Seek Time First (SSTF)
  - Always pick request with shortest seek time
  - Also called shortest positioning time first (SPTF)
- Advantages:
  - Exploits locality of disks
  - Higher throughput
- Disadvantages:
  - Poor fairness/Starvation
  - Don’t alwys know what request will be fastest

SSTF Example

queue = 98, 183, 37, 122, 14, 124, 65, 67

head starts at 53

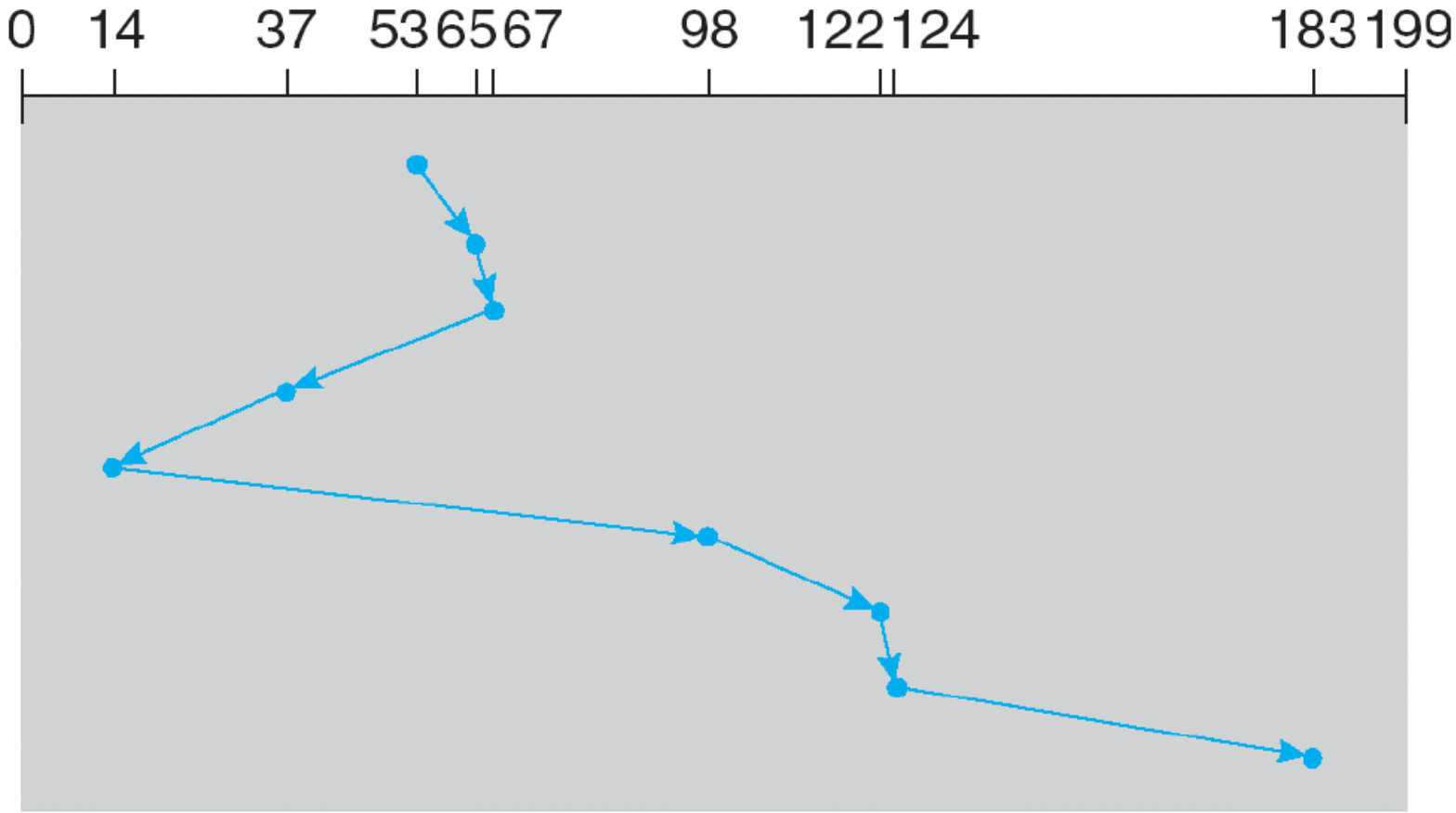

Disk Scheduling: SCAN

- Elevator Scheduling (SCAN)
  - Pick request with shortest seek time
  - Switch direction at end of disk (or CSCAN loops linearly)
- Advantages:
  - Exploits locality of disks
  - Bounded waiting
- Disadvantages:
  - Might miss locality SPTF could exploit

CSCAN Example

queue 98, 183, 37, 122, 14, 124, 65, 67

head starts at 53

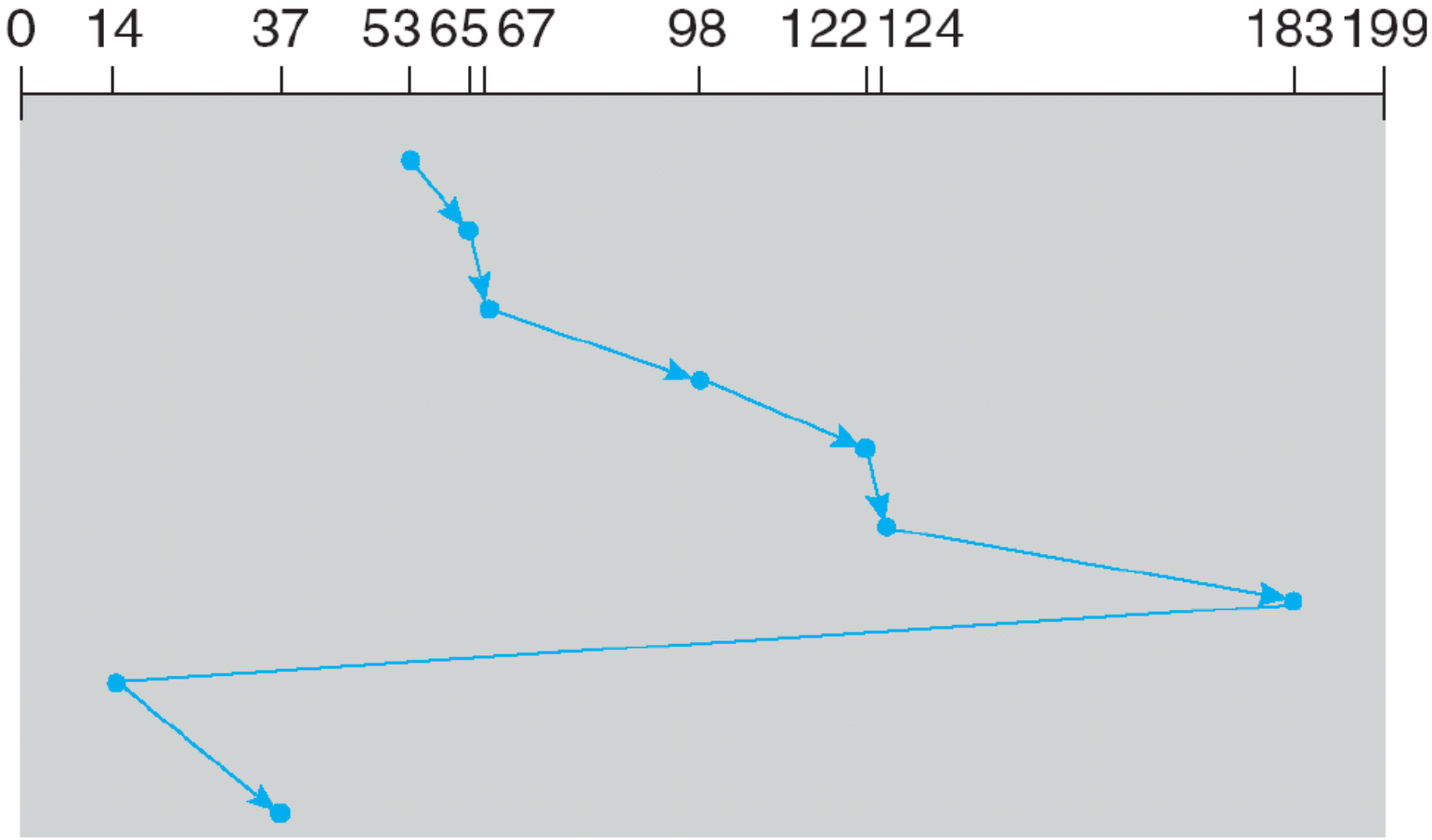

SATA NCQ/SCSI TCQ

- Native/Tagged Command Queueing
- Allows 32 outstanding commands (queue length)
- Drive can reorder requests for performance
  - Using scheduling algorithms like we previously discussed
- NCQ is important for SSDs!
  - NCQ enables better hardware pipelining
- SCSI TCQ enables queue modes
  - Insert into Head of Queue, Enforce Order, Simple

Flash Memory

Flash Memory

- No moving parts
  - Stores data using charge
  - No mechanical seek times
- Limited writes
  - Blocks wear out after 10000 (MLC) – 100000 (SLC) erases
  - Requires flash translation layer (FTL) for wear leveling
  - FTL can impact performance and reliability!
- Limited durability
  - Charges wear out over time (10 – 100 years at SATP)

Types of Flash

- NAND flash
  - High Density
  - Faster erase/write
- NOR flash
  - Faster reads
  - Slower erases
- Single-level cell (SLC) vs. Multi-level cell (MLC)
  - MLC encodes multiple bits in voltages
  - MLC is slower to write
  - MLC has shorter durability (bits decay faster)

Flash Characteristics [Caulfield'09]

Parameter	SLC	MLC
Density Per Die	4 GB	8 GB
Page Size	2048+32 Bytes	2048+64 Bytes
Block Size	64 Pages	128 Pages
Read Latency	25 us	25 us
Write Latency	200 us	800 us
Erase Latency	2000 us	2000 us
40 MHz read	75.8 MB/s	75.8 MB/s
40 MHz program	20.1 MB/s	5.0 MB/s
133 MHz read	126.4 MB/s	126.4 MB/s
133 MHz program	20.1	5.0 MB/s